DESIGN, CONSTRUCTION, and RENOVATION STANDARDS

UNIVERSITY OF CENTRAL FLORIDA
UNIVERSITY OPERATIONS

NOVEMBER 13, 2026
VERSION 2026-3

University of Central Florida
University Operations

P.O. Box 163020
Orlando, Florida 32816-3631
PH: (407) 823-5270
FAX: (407) 823-5141

http://fs.ucf.edu

Design, Construction, and Renovation Standards (Standards)

November 13, 2026 Edition

Version 2026-3

This edition represents a major update of the format and content of the UCF Standards. Subsequent updates to these Standards will include a Summary of Revisions after the Table of Contents. In addition to Design, Construction, and Renovation Standards, this document incorporates information previously contained in the UCF Professional Services Guide, the New Construction and Renovation Requirements, and the Project Manual. Telecommunications and Design Standards are maintained by the Office of Computer Services and Telecommunications and are incorporated by reference to this document. This edition supersedes previous editions.

Standards Change Committee
William Finn
Bill Martin (Chair)
Duane Siemen
Jonathan Varnell (Final Approver)
Ad hoc Members (EHS Director, UCFIT Director, Department of Security Director, OIR Director)

Standards Deviation Committee
Benjamin Davis (Chair / Final Approver)
Bill Martin
Duane Siemen

Table of Contents

Items in red have been added to this version of the document.

Section A - How to Use This Document

Introduction A-1

A.1 Purpose A-1

A.2 Format of this Document A-1

A.3 Responsibility of the Design Professional A-2

A.4 Responsibilities of the Standards Committee A-2

A.5 Standards Deviation Procedure A-2

A.6 Standards Change Procedure A-3

Section B - Working with UCF

Introduction B-1

B.1 The Owner B-1

Authority B-1

UCF and the UCF Project Manager B-1

The University Standards Committee B-1

The University Master Plan Committee B-1

B.2 Getting Started B-2

B.3 Facility Program B-2

B.4 Project Communication B-2

B.5 Project Schedule B-2

B.6 Design Review Workshops B-3

B.7 Site Information B-3

Site Surveys B-3

Geotech B-4

B.8 Invoicing B-4

Supporting Documentation Required B-4

Invoice Approval Process B-5

B.9 Digital Information Management B-5

Drawing Format Requirements B-5

B.10 Critical Needs Checklist B-6

B.11 Construction Phase Services B-6

B.12 Occupancy and Project Closeout B-7

Substantial Completion B-7

Final Completion B-7

B.13 Post-Occupancy Inspection B-7

B.14 Record Documents B-7

Section C - Design Guidelines

C.1 Design Principles C-1

C.2 Design Review Process C-4

C.3 Code Review and Permitting C-4

C.4 Research Area Planning and Renovation C-5

C.5 Confined Space Design C-5

C.6 Professional Services Guide C-5

C.7 Environmental Health and Safety Construction Information C-6

Section D - Standards & Technical Requirements

D.0 Procurement and Contracting Requirements

Introduction D.0-1

Document Organization and Drawing Requirements D.0-1

Cover Page D.0-1

List of Drawing Sheets D.0-1

Graphic Standards D.0-2

Instructions for Procurement D.0-2

Traditional Design/Bid/Build D.0-2

Procurement Forms and Supplements D.0-3

D.1 General Requirements

Introduction D.1-1

Summary of Work D.1-1

Access to Site D.1-1

Alternates D.1-1

Project Management and Coordination D.1-1

Construction Progress Documentation D.1-2

Submittal Procedures D.1-2

Special Procedures D.1-2

Owner Safety Requirements D.1-3

Health, Safety and Emergency Response Procedures D.1-4

Indoor Air Quality Procedures D.1-4

Quality Requirements D.1-4

Temporary Facilities and Controls D.1-5

Field Offices and Sheds D.1-7

Vehicular Access and Parking D.1-7

Temporary Barriers and Enclosures D.1-7

Temporary Erosion and Sediment Control D.1-8

Temporary Storm Water and Pollution Control D.1-8

Project Identification and Signs D.1-8

Execution and Closeout Requirements D.1-8

Project Record and As-Built Documents D.1-9

Operations and Maintenance Data D.1-9

Facility Support Space D.1-10

Waiting Space D.1-11

Family-Type and Unisex Restrooms D.1-11

Kitchens and Kitchenettes D.1-11

Lactation and Mothers Room D.1-11

Commissioning D.1-12

Attic Stock D.1-12

D.2 Existing Conditions

Introduction D.2-1

Survey Requirements D.2-1
Hazardous Material Assessment D.2-1
Landscape Assessment D.2-2
Subsurface Investigation D.2-3
Geotechnical Investigations D.2-3

D.3 Concrete
Introduction D.3-1
Concrete Joints, Accessories, and Anchoring D.3-1
Concrete Reinforcing D.3-1
Cast-in-Place Concrete D.3-1
Concrete Finishing D.3-2
Precast Concrete D.3-2
Concrete Cutting and Boring D.3-3

D.4 Masonry
General Standards D.4-1
Building Exterior D.4-1
Mortar D.4-1
Masonry Accessories D.4-1
Commissioning of Masonry D.4-1
Unit Masonry D.4-2
Brick Masonry D.4-2
Concrete Unit Masonry D.4-3
Glass Unit Masonry D.4-3
Masonry Restoration and Cleaning D.4-3
Cast Stone D.4-3

D.5 Metals
General Standards D.5-1
Structural Metal Framing D.5-1
Structural Steel D.5-1
Metal Fabrications D.5-1
Metal Stairs D.5-1
Handrails and Railings D.5-1

D.6 Wood, Plastics, and Composites
Introduction D.6-1
Section I - General Standards D.6-1
Rough Carpentry D.6-1
Architectural Woodwork D.6-1
Section II - Level-specific Standards D.6-3

D.7 Thermal and Moisture Protection
Introduction D.7-1
Section I - General Standards D.7-1
Site Drainage D.7-1
Dampproofing and Waterproofing D.7-1
Thermal Protection D.7-1
Exterior Insulation and Finish Systems D.7-1
Weather Barriers D.7-1
Vapor Retarders D.7-1
Steep Slope Roofing D.7-2
Roofing and Siding Panels D.7-2
Roof System Design D.7-2
Pre-installation Conference D.7-4
Warranty Requirements D.7-4
Metal Wall Panels D.7-5
Membrane Roofing D.7-5
Flashing and Sheet Metal D.7-5
Standing Seam Metal Roofing D.7-6
Roof and Wall Specialties and Accessories D.7-6
Firestopping D.7-6
Sealants and Caulking D.7-6
Section II - Level-specific Standards D.7-8

D.8 Openings
Introduction D.8-1
Section I - General Standards D.8-1
Entrances, Storefronts, and Curtain Walls D.8-1
Entrances and Passageways D.8-1
Exterior Doors D.8-1
Interior Doors D.8-2
Door Frames D.8-2
Specialty Doors D.8-3
Roof Access D.8-3
Mechanical and Electrical Room Access D.8-3
Windows D.8-3
Window Coverings D.8-3
Hardware, General D.8-3
Locksets D.8-4
Closers D.8-4
Hinges/Butts D.8-5
Keys and Keying D.8-5
Panic Exit Devices D.8-6

D.9 Finishes
Introduction D.9-1
Section I - General Standards D.9-1
Selection and Approval of Finishes D.9-1
Gypsum Board D.9-1
Lath and Plaster D.9-2
Ceramic Tile D.9-2
Quarry Tile D.9-2
Acoustical Ceilings D.9-2
Concrete Flooring D.9-3
Rubber and Vinyl Flooring D.9-3
Carpeting D.9-3
High Hazard Area Flooring (General Laboratory, Shop, and Hazardous Liquid Storage and Use Area Flooring) D.9-4
Painting and Coating D.9-4
Finish Schedule D.9.6

D.10 Specialties
General Standards D.10-1
Markerboards D.10-1
Tackboards D.10-1

Building Directory D.10-1
Interior Signage D.10-1
Exterior Signage D.10-2
Letter Light Signs D.10-3
Toilet Compartments D.10-4
Wall and Door Protection D.10-4
Toilet Accessories D.10-4
Fire Extinguishers D.10-4
Storage Specialties D.10-5
Load Points and Fall Protection D.10-5
~~Construction Identification Sign~~ D.10-7
Building Plaque D.10-8

D.11 Equipment
Section I - General Standards D.11-1
Parking Control D.11-1
Loading Docks D.11-1
Foodservice and Laundry Equipment D.11-1
Audio Visual Equipment D.11-1
Speciality Equipment D.11-1
Laboratory, Equipment, Research, and Shop Areas D.11-1
Facility Maintenance and Operation Equipment D.11-4
Recycling D.11-7
Section II - Level-specific Standards D.11-8

D.12 Furnishings
Section I - General Standards D.12-1
Window Treatments D.12-1
Laboratory Casework D.12-1
Furniture D.12-1
Fixed Seating D.12-1
Section II - Level-specific Standards D.12-3

D.14 Conveying Equipment
Elevators D.14-1
Non-proprietary Equipment and Controls D.14-1
Elevator Equipment Rooms D.14-1
Elevator Cabs D.14-1
Operating Features D.14-1
Elevator Hoistways D.14-2
Electrical Requirements D.14-2
Training D.14-2
Certificates D.14-2
Warranty and Service D.14-3

D.21 Fire Suppression
Introduction D.21-1
Fire Suppression D.21-1
Clean-Agent and Similar Specialty Fire Extinguishing Systems D.21-5

D.22 Plumbing
Section I - General Standards D.22-1
Commission of Plumbing D.22-1
Plumbing Piping D.22-1
Facility Sanitary Sewer D.22-2
Facility Storm Drainage D.22-2
Plumbing Equipment D.22-3
Plumbing Fixtures D.22-3

D.23 HVAC
Section I - General Standards D.23-1
Commissioning of HVAC D.23-2
Design Setpoints - Occupied Hours D.23-2
Design Setpoints - Unoccupied Hours D.23-2
Instrumentation and Control for HVAC D.23-3
Piping and Pumping D.23-4
HVAC Air Distribution D.23-7
Kitchen, Kitchenette, and General Exhaust D.23-12
Lab, Shop, and Research Exhaust D.23-12
Filtration and Disinfection D.23-13
Central Heating Equipment D.23-14
Air Handler Units, Coils, and Associated Equipment D.23-14
Split Direct Expansion (DX), Variable Refrigerant Flow (VRF), Mini Split Units D.23-16
System Quality Assurance and Contractor Turnover to Owner D.23-17

D.25 Integrated Automation
Integrated Automation D.25-1
Commissioning of Integrated Automation D.25-1
Unified Building Systems D.25-1
BAS Updates D.25-1

D.26 Electrical
Introduction D.26-1
Section I - General Standards D.26-1
Equipment Location D.26-1
Common Work Results for Electrical D.26-1
Ducts and Raceways for Electrical Systems D.26-2
Boxes, Receptacles, Switches and Associated Materials D.26-2
Electrical Identification D.26-4
Engineering Power Studies D.26-4
Engineer Power Study Requirements D.26-4

Protective Device Coordination Study D.26-4
Fault Current Study D.26-5
Load Calculations D.26-5
Arc Flash Protection Study D.26-5
Study Report D.26-6
Arc Flash Hazard Label D.26-6
Commissioning of Electrical Systems D.26-7
Electrical Transmission D.26-7
Motors and Low Voltage Controllers D.26-9
Variable Frequency Drives (VFD) D.26-10
Facility Electrical Power Generating and Storing Equipment D.26-10
Emergency Standby Power Generation D.26-10
Uninterruptible Power Sources (UPS) D.26-12
Facility Lightning Protection D.26-12
Lighting D.26-12
Interior Lighting D.26-12
Guidelines for Large Volume Spaces D.26-13
Control Devices - Daylighting D.26-13
Warranty D.26-14
Exterior Lighting D.26-14
Enclosed Switches and Circuit Breakers D.26-15
Molded-case Circuit Breakers D.26-15
Section II - Level-specific Standards D.26-17

D.27 Communications

Telecommunications ~~Design Standards~~ D.27-1
General D.27-1
Telecommunications Designer, Contractor/Installer Qualifications and Warranty D.27-2
Outside Plant Pathways D.27-2
Conduit Duct Banks D.27-2
Maintenance Holes (MHs) D.27-3
Pull Boxes D.27-3
Outside Plant Cabling D.27-4
Outside Plant Copper Telephone Cabling D.27-4
Outside Plant Fiber Optic Cabling D.27-4
GPS Data And As-Builts D.27-5
Communications Rooms - Entrance Rooms and Equipment Rooms D.27-5
Communication Room Requirements D.27-5
Communication Room Cable Trays or Ladder Rack D.27-7
Relay Rack D.27-7
Grounding and Bonding D.27-8
Termination Components D.27-8
Redbox/Hoffman Solutions D.27-8
Inside Plant Pathways D.27-9
Telephone/Data Outlet/ Raceways D.27-9
Cable Tray Raceway Systems D.27-10
J Hooks D.27-11
Inside Plant Cabling D.27-12
Riser Cabling D.27-12
Horizontal Cabling D.27-12
Work Area Outlets D.27-13
Labeling D.27-14
Security Camera Infrastructure D.27-14
Firestopping D.27-14
Emergency Blue Light Phones (EBLP) D.27-15
Overview and Types D.27-15
Installation D.27-15
Cabling D.27-15
Wireless - Wireless Access Points (WAP) D.27-16
Radio Distribution Antenna System (DAS) D.27-17
Audio Visual Systems (Future) D.27-17
Figures D.27-18

D.28 Electronic Safety and Security

Section I - General Standards D.28-1
Electronic Safety and Security D.28-1
Access Control D.28-1
Cameras D.28-2
Security Alarm and Panic Buttons D.28-2
Fire Detection and Alarm D.28-2
Design D.28-3
Installer Qualifications D.28-5
Materials and Installation D.28-5
Approval, Testing, Documentation, and Warranty D.28-10
Mass Notification Systems D.28-11

D.31 Earthwork

Site Clearing D.31-1

Rough Grading D.31-1
Excavation and Fill D.31-1
Termite Control D.31-2

D.32 Exterior Improvements

Introduction D.32-1
Bases, Ballasts, and Paving D.32-1
Curbs, Gutters, Sidewalks, and Driveways D.32-1
Driveways and Parking Areas D.32-1
Sidewalks and Ramps D.32-2
Site Furnishings D.32-2
Irrigation D.32-3
Planting D.32-3
Planting Preparation D.32-5
Turf and Grasses D.32-5
Tree Grates D.32-5

D.33 Utilities

Introduction D.33-1
Mission Statement D.33-1
General Comments D.33-1
Wastewater Service and Installation D.33-2
General Information D.33-2
Typical Requirements D.33-2
Pump Stations D.33-3
Metering D.33-3
Plan Review and Coodination with UCF UES D.33-3
Field Inspections with UCF UES D.33-4
Electric Services and Meter Installation Requirements D.33-13
General Information D.33-13
Definitions D.33-13
Type and Characteristics of Service D.33-14
Typical Requirements D.33-15
Three-Phase Pad Mounted Step-Down Transformer Pads D.33-15
Pullboxes D.33-15
Meter Location D.33-16
Current Transformer Installations D.33-16
Plan Review and Coordination with UCF UES D.33-16
Duke Energy Service Requirements D.33-17
Inspection Requirements D.33-17
Domestic Water Service and Meter Installation Requirements D.33-29
General Information D.33-29
Typical Requirements D.33-29
Metering D.33-32
Plan Review and Coordination with UCF UES D.33-32
Field Inspections with UCF UES D.33-33
Natural Gas Pipeline, Regulator, and Meter Installations Requirements D.33-40
General Information D.33-40
Typical Requirements D.33-41
Metering D.33-44
Plan Coordination and Review with UCF UES D.33-45
Chilled Water Meter Installations and Requirements D.33-52
General Information D.33-52
Typical Requirements D.33-53
Plan Coordination and Review with UCF UES D.33-53
Handling D.33-53
Details for Use in Design and Installation of the Underground Chilled Water Sytem D.33-54
Piping D.33-54
Valves D.33-56
Valves Boxes D.33-57
Tapping Sleeve, Valves, & Wet Taps D.33-57
Cleaning, Fishing, and Passivation D.33-58
Hydrostatic Pipe Line Testing D.33-59
Pipe Installation D.33-59
Pipe Bending Material D.33-60
Underground Penetrations Into Buildings D.33-60
Mechanical Joint Restraints D.33-60
Service Saddles D.33-60
Air Release and Isolation Valves D.33-61
Drain and Air Vents D.33-61
Thrust Blocks D.33-61
Accessories D.33-61
Utility Pipe Cover, Clearances, and Locating Devices D.33-61
Pressure and Temperature Gauges D.33-62

Reclaimed Water Service and Meter Requirements D.33-69
General Information D.33-69
Metering D.33-69
Plan Review and Coordination with UES D.33-69

A How to Use This Document

This section includes:

Introduction

A.1 Purpose

A.2 Format of this Document

A.3 Responsibility of the Design Professional

A.4 Responsibilities of the Standards Committee

A.5 Standards Deviation Procedure

A.6 Standards Change Procedure

Introduction

The planning, construction, operation, and maintenance of facilities is a critical function supporting the educational, research, and service mission of UCF. As the entity responsible for directing planning, design, and construction, University Operations strives to meet its obligations to provide high-quality and cost-effective services. This requires the timely and appropriate communication of information to a wide range of project stakeholders.

A.1 Purpose

The UCF Design, Construction, and Renovation Standards (Standards) compose a living document, updated annually, with revisions reflecting current industry standards and lessons learned. The document does not modify the contractual obligations of the agreement between UCF (the Owner) and the Architect/Engineer, Construction Manager, Design Builder, General Contractor, or other party. These standards are not intended to be fully inclusive of all scenarios that may be encountered and are not intended to replace the need for the exercise of good judgment by experienced and responsible professionals and contractors.

The Standards are unique to the University of Central Florida. They are not specifications; however, they are to be used as the basis for the development of the Contract Documents. In cases where the Standards exceed current codes, the Standards will take precedence. **CNA-1: All construction specifications must be University project specific and based on the current version of the Standards.**

Regulations are revised periodically, and care must be taken to verify compliance with other applicable governmental standards. Approval by the Owner does not constitute approval by other governmental or regulatory agencies.

All references to codes shall mean the latest editions adopted through legislation for use in state-owned or -leased buildings. Construction documents must list appropriate codes and the effective date of these codes.

Compliance with these Standards shall in no way constitute a waiver of the Architect/Engineer's or Contractor's liability.

A.2 Format of this Document

This document is formatted for ease of use online or in print. It provides a framework for understanding the design and construction process, in compliance with UCF requirements and appropriate industry standards. An effort has been made to incorporate industry standards by reference, rather than reproducing them here. It is important that design and construction personnel engaged by UCF review and understand the current versions of the reference documents.

There are four sections in these Standards:

A	How to Use This Document
B	Working with UCF
C	Design Guidelines
D	Standards & Technical Requirements

Section A: How to Use This Document describes the format and use of the Standards. Section B: Working with UCF provides instructions to the design professional on understanding and meeting project obligations. Section C: Design Guidelines provides a phase-by-phase description of expectations, review processes, and activities to accomplish a project. Section D: Standards & Technical Requirements lists requirements of all design and construction projects. This section uses the Construction Specifications Institute (CSI) MasterFormat®[1] title and numbering format. While Section

[1] MasterFormat is a registered trademark of The Construction Specifications In stitute. MasterFormat is the specifications-writing standard for most commercial building design and construction projects in North America.

Knight Notes

A-1: *Your feedback is welcome! As a living document, these Standards are periodically reviewed. UCF vendors are invited to provide feedback on the content of these Standards via email to Planning, Design and Construction at the following address:* ***UCFstandards@ucf.edu****.*

Please include specific information on how the incorporation of a revision will assist UCF goals on future projects. For individual project exceptions, justification must be provided and the Deviation Approval Process must be followed.

A-2: *Broken link? This document contains hyperlinks to current versions of reference documents at the time of publication; however in a dynamic internet environment, the provided links are subject to change. Please report any incorrect or broken links to* ***UCFstandards@ucf.edu****.*

D is not a specification, it follows the numbering convention of a specification to allow for ease of organization and updating.

These Standards are required for all UCF projects. Each section has a basic level of standard required by all campus projects, as listed under "SECTION I - GENERAL STANDARDS." Requirements that differ by project level are listed under "SECTION II - LEVEL SPECIFIC STANDARDS" for the following categories:

Level A - Laboratory

Level B - Classrooms, Offices, Conference Rooms, and Other Academic Spaces

Level C - Renovation

Level D - Housing

Level E - Retail

Items identified by the Standards Committee as **"Critical Need Items" are indicated in bold blue type throughout the document to emphasize their importance.** ~~A Checklist of the critical need items, showing how each item is addressed in the design documents, must be submitted at each major design phase.~~

A.3 Responsibility of the Design Professional

The construction documents developed for each project shall be consistent with the stated project goals, the building program, and the project budget. These Standards list items that are required in addition to applicable building codes, life safety codes, and accessibility codes. In the event that the design professional or Contractor should identify specific instances where conflicts exist with code compliance, they should immediately be brought to UCF's attention in writing, along with recommendations for resolving the conflict. **CNA-2: Firms under contract prior to the adoption of revisions must review the posted edition for the most recent changes and evaluate any cost or time implications, if any, to their projects. These implications must be sent to the Project Manager, in writing, for action by the University.**

A.4 Responsibilities of the Standards Committee

1. Update the UCF Design & Construction Standards at least annually.
2. Review submitted deviations and revisions in a timely manner.
3. Have at least one representative of the Standards Committee in all design phase meetings and workshops, including the kick-off meeting, for all major projects.
4. Emphasize to user groups that buildings are "UCF buildings," not departmental or college buildings.
5. Serve as initial interpreter of the UCF Design, Construction, and Renovation Standards.
6. Review and recommend approval of Owner's Project Requirements (OPR), starting with the program verification phase.

A.5 Standards Deviation Procedure

Users of these Standards should provide information regarding changes that may be of significant benefit to UCF. The review and approval process for deviations is recognized as a time consuming task, so applicants submitting deviation requests to the Standards Committee are advised to be judicious in the

Knight Notes

A-3: *The revision date for each section appears at the bottom left hand corner of each page. In the event that a new page is issued between annual updates, this revision will be noted in the Table of Contents.*

A-4: *To allow for ease of updates and insertions, each section is numbered separately starting with the letter designating the section followed by the sequential number.*

use of the process.

Deviation: a one-time departure from the Standards for a particular circumstance.

Requests for deviations are intended only during the design process. Deviation requests during construction may be submitted to address conditions found on-site.

g. The applicant must submit a request via e-Builder process 17 – Standards Deviation Request Process (SDR Process). The SDR Process will route to the UCF Project Manager for review. Once reviewed by the project manager, the request will be forwarded to the Standards Committee for vote and to the Committee Chair for final adjudication. The Standards committee may request comment or a meeting to discuss the proposed deviation. As required, the project manager and project team should be available to support the request. The requestor and project manager will be notified of the outcome via the SDR Process once the committee has approved or rejected the request.

All approved deviations shall be incorporated into the project documents. The e-Builder SDR Process will archive all approved and rejected standards deviation requests in the associated project's document folder 3.07 Standards Deviation Requests.

A.6 Standards Change Procedure

Change: a change to the Standards which, after being properly approved, is adopted and applied to future projects.

To request a change to the Standards, the requestor must submit e-Builder process 15 – Standards Change Request (SCR Process) from within the Standards Request Repository Project.

The process will route to the Standards Committee for vote and then to the Vice President of University Operations for final approval. The Standards committee may request comment or a meeting to discuss the proposed change. As required, the requestor and other stakeholders should be available to support the request. All approved changes to the Standards will be adopted and published on a quarterly basis.

The Planning, Design, and Construction Office Technology Manager will update the individual standards change(s) in the InDesign file and:

a. Identify any additions using red text;
b. Identify any deletions by using red strikethrough;
c. Change any previously-published red text or red strikethroughs to black text at the first update of the calendar year;
d. Update the revision date of the individual Standards section to the current date.
e. Update the cover page of the Standards to reflect the current date;
f. Print PDFs of each revised section and the cover, and compile into a single new standards PDF document to be published on the Planning, Design, and Construction website.
g. Seek approval from the Standards Change Committee Chair prior to distribution
h. Post the previous version of the Standards at the top of the "Previous UCF Design, Construction and Renovation Standards Versions"
i. Post the new version of the Standards at the top of the "Standards and Requirements" section of the website.
j. Email the Standards Change Request Committee, the Committee Chair, and all Planning, Design, and Construction staff once website posting is complete.

Requestors will be notified of requests for changes that were

not accepted, including whether the disapproval is final or temporary, and what changes are needed.

Architects, Engineers, and Contractors are encouraged to assist UCF in keeping these Standards current by bringing to the Owner's attention innovations in technology, materials, and construction systems.

Records for all submitted Standards Change Requests will be maintained within the Standards Request Repository project in e-Builder.

B

Working with UCF

This section includes:

Introduction

B.1 The Owner

- **Authority**
- **UCF and the UCF Project Manager**
- **The University Standards Committee**
- **The University Master Plan Committee**

B.2 Getting Started

B.3 Facility Program

B.4 Project Communication

B.5 Project Schedule

(cont'd on Page B-2)

Introduction

Since its founding in 1963, the University of Central Florida has experienced tremendous growth. With a main campus, health sciences campus, hospitality campus, downtown campus, and ten regional locations, UCF has facilities supporting twelve colleges, 210 degree programs, and over 63,000 students.

UCF's quality as an academic, research, and partnership university must be reflected in its projects and processes. The design and construction process involves many important stakeholders and must be conducted with integrity and respect.

References to Architects/Engineers (A/E) includes all design professionals that perform services for UCF. The A/E must act in the best interest of UCF, as leader of the design team. The design professional is also required to adhere to terms and conditions included in the contract for professional services, which establishes the relationship between UCF and the design professional.

B.1 The Owner

The Owner is UCF, on behalf of the University of Central Florida Board of Trustees (the Board), which governs the University. The University President is granted authority by statute to execute design and construction contracts and is granted authority by administrative rule to administer the construction program.

Funds for construction are appropriated or authorized by the Florida Legislature. The Board is accountable to the legislature for their proper expenditure. In discharging this accountability, the Board delegates certain authority for the construction program to the University President. The construction responsibility of the University President is administered by the Office of Planning, Design and Construction.

AUTHORITY

- Develop the building program based on the Educational Plant Survey. The building program is the planning document from which the legislative budget request is generated, and from which the A/E will develop plans and specifications.
- Establish the project budget.
- Establish design, construction, and renovation standards.
- Recommend the selection of the A/E or other design professionals.
- Determine the method for advertising a construction project and recommending award of contracts for construction management, design-build, or competitive bid of construction work.

UCF AND THE UCF PROJECT MANAGER

Planning, Design and Construction is responsible for all design and construction projects. The UCF Project Manager is the direct link between the A/E and the UCF stakeholders, and is responsible for coordinating review of drawings and specifications. All communication from the design and construction team to UCF should be made through the UCF Project Manager, in writing.

THE UNIVERSITY STANDARDS COMMITTEE

The University Standards Committee is responsible for maintaining and updating the UCF Standards. See Section A for the responsibilities of the Standards Committee.

THE UNIVERSITY MASTER PLAN COMMITTEE

The University Master Plan Committee (UMPC) is a broadly representative group of faculty, administrators, staff, and students whose charge is to make recommendations to the President of the University regarding matters of aesthetics and suitability for minor projects and modifications of the campus landscape, utilities, and building exteriors. They review short-range and long-range issues related to land use, facilities planning, and future development of the campus,

Division B Contents

(cont'd from Page B-1)

B.6 Design Review Workshop
B.7 Site Information

- **Site Surveys**
- **Geotech**

B.8 Invoicing

- **Supporting Documentation Required**
- **Invoice Approval Process**

B.9 Digital Information Management
B.10 Critical Needs
B.11 Construction Phase Services
B.12 Occupancy and Project Closeout

- **Substantial Completion**

Final Completion
B.13 Post-Occupancy Inspection
B.14 Record Documents

including protection and preservation of natural resources on the campus. The UMPC also reviews signage, site furniture, public art, and some temporary installations, at the charge of the Vice President for Administration and Finance and the Associate Vice President for Administration and Finance (University Operations).

The UMPC serves as an advisory body only; with all meetings open for public attendance, it serves as a clearinghouse for communication to and from the campus community. The committee meets monthly to review project plans. All plans are submitted through Planning, Design and Construction, and, before being considered by the committee at large, they must be approved by the Associate Vice President for Administration and Finance (University Operations) and the Vice President for Administration and Finance. Terms of service shall be: three (3) years, staggered for faculty and appointed members; one year for student members; and for position specific members, ongoing.

B.2 Getting Started

Projects to construct or renovate facilities typically begin with a project request approved by UCF Space Administration. This is followed by approval of budget and funding. For major projects, design professionals (A/E) and/or construction firms are selected through a state-approved, competitive process. Following this selection, PDC will transmit a copy of the approved facility program as a basis for fee negotiation and the scope of work to be accomplished. The design professional and construction firm are only authorized to begin work upon receipt of a written Notice to Proceed or Purchase Order.

B.3 Facility Program

CNB-1: Any changes to in the approved facility program shall be modified by written recommendation for approval by the President. Such amendments will be proposed by the A/E and submitted to Planning, Design and Construction for review prior to further submission.

B.4 Project Communication

All communications from the design and construction team to UCF should be made in writing through the UCF Project Manager.

CNB-2: The Architect-of-Record is directed to work through the UCF Project Manager and simultaneously copy the Commissioning Agent (if applicable) on all communications and project coordination. All correspondence related to the project shall reference the assigned project number, project title, and location.

The A/E is responsible for coordinating the agenda for meetings with the UCF Project Manager at least twenty-four hours in advance of the meeting. The A/E is also responsible for writing meeting minutes from each meeting and sending them promptly to the UCF Project Manager for review and distribution to project stakeholders.

The A/E is responsible for creating and maintaining the project directory throughout the project. The directory shall include a listing of all primary and emergency contacts, decision-makers, task leads and discipline leads, A/E consultants, contractors, and key university personnel. The project directory shall also include government, utility agency, and other contact information, as appropriate.

The A/E is required to receive written approval prior to seeking publicity, submitting the project to design competitions, or engaging in similar activities for UCF projects. Approval of publicity will be handled in a timely manner and in accordance with the contract between the vendor and UCF.

B.5 Project Schedule

The schedule for performance of services is part of the scope of work and is included in the contract. The Notice to Proceed is effective upon receipt, or on such other date as

Knight Notes

B-1: Labeling of Auxiliary Materials: *During the course of a project, the A/E often submits auxiliary material, such as sketches, overlays, catalog cuts, details, addenda, etc., for the client's information and/or approval Since the University handles many projects simultaneously, it is vital that materials be adequately submitted and uniquely identified. Each auxiliary item submitted must have the following minimum identification on the right hand quadrant:*

- *Project name, University of Central Florida*
- *Project number*
- *Date (including current revision, if any), and*
- *Appropriate drawing or sketch number*

may be specifically referenced in the Notice to Proceed. Within ten calendar days after the effective date of the Notice to Proceed, the A/E shall deliver to the UCF Project Manager a project schedule identifying the specific dates for all phases applicable to the project.

The schedule shall incorporate dates of anticipated meetings and end-of-phase milestone dates as stipulated by the A/E agreement. In addition, the schedule shall indicate:

- a list of anticipated interim design conferences and workshops;
- the start dates and duration of each major phase of the project design;
- the duration and completion dates of each design review period that are required to maintain the project schedule;
- the projected duration and completion dates of other project-related activities, such as funding decisions, surveys, geotechnical investigations, State Fire Marshal reviews, St. Johns River Water Management District approvals, etc.; and
- the estimated duration of bidding, award, and construction periods.

The schedule will be discussed and finalized at the initial planning meeting. The schedule is updated by the A/E and resubmitted with each end-of-phase submittal. Prior to starting any subsequent project phase, the current submission shall be approved by PDC and the Associate Vice President of Administration and Finance (University Operations). Changes requested by the end user must be made prior to the completion of the Design Development documents.

B.6 Design Review Workshops

At the conclusion of each phase, the A/E is required to submit to the Owner the contracted deliverables for review and comment. The UCF Project Manager will coordinate a comprehensive review workshop with all of the project stakeholders. Comments will be sent to the A/E in writing. Responses of how the comments have been addressed (not how they will be addressed) must be returned to the UCF Project Manager prior to the next deliverable milestone. (See the UCF policy on Design Review workshops for additional information.)

B.7 Site Information

The A/E shall visit and inspect the site and location of the work, including the general surrounding area, as often as required to be fully acquainted with all pertinent local conditions affecting project development.

The UCF Project Manager shall provide available information relative to the site. The A/E may request that the UCF Project Manager provide additional information, if deemed necessary, and the UCF Project Manager shall furnish that additional information or shall direct the A/E to obtain it. The A/E shall evaluate and verify all information provided by the UCF Project Manager.

When a project includes extensive renovations, restoration, or remodeling of an existing building, the UCF Project Manager shall provide the A/E with available record drawings of the facility. The A/E shall verify the accuracy of the record drawings to develop accurate construction documents. The A/E shall investigate existing conditions, both in the open and those that are hidden from view, in addition to preparing the required measured drawings. When the exposure of existing surface or subsurface construction is considered necessary, the A/E shall arrange with the UCF Project Manager the necessary selective demolition work. The UCF Project Manager shall provide the A/E with existing information regarding asbestos and lead-based paint surveys, if available, as well as operations and maintenance plan activities.

SITE SURVEYS

The A/E shall consult with the UCF Project Manager to determine if a site survey is available. If one is not available, the A/E shall determine the scope of surveying needs. When requested by the Project Manager to obtain a survey, the A/E shall select a qualified surveyor and provide a proposal to the

UCF Project Manager. When possible, the cost of the survey will be included in the A/E design proposal, either as a fixed amount based on the surveyor's proposal, or as an allowance.

GEOTECH

The A/E shall include an allowance in its design proposal for the geotechnical work to be performed on new construction projects. Once the building footprint is established and the boring criteria is specified by the structural Engineer, the A/E will engage the geotech Engineer to complete the work. The A/E must coordinate with the UCF Project Manager on the dates and times of all work.

B.8 Invoicing

The University and the State of Florida are required by Florida Statutes to approve all invoices for completed, acceptable, and undisputed services.

- No invoice shall be submitted until the work has been approved and completed.
- Incorrect or incomplete invoices may be returned to the A/E with instructions for resubmission.
- All invoices shall be submitted to the University on the UCF Professional Service Invoice Form, or other approved invoice form.
- The A/E shall submit a signed original, including backup documentation.
- Invoices shall be numbered consecutively, beginning with number 1, and continuing in numerical order throughout the duration of the contract. If an invoice that is not numbered consecutively from the last approved invoice is received by the University, it will be renumbered.
- All authorized services and expenses for the life of the project shall be indicated on the invoice form. As additional services are authorized, they shall be added to the invoice form. The basic services are listed as provided on the payment schedule in the agreement.
- Approved, reimbursable expenses shall be listed separately. No items that have not been authorized either by the agreement or an additional service authorization shall be included on the invoice.

SUPPORTING DOCUMENTATION REQUIRED

The A/E shall ensure that all invoices are properly prepared and contain the required supporting documentation. Supporting documentation shall be organized to correspond with the order that the items being requested for payment appear on the invoice. In order to comply with the State Comptroller's rules promulgated to meet the requirements of Florida Statutes, supporting documentation for approval of invoices shall be as follows:

Basic Services

Design Phases: The work product specified in the Agreement shall have been submitted and approved prior to the invoice. No other supporting documentation is required. Invoices for Professional Services can only be billed upon completion of phased deliverables. Monthly invoices for partial deliverables will be rejected.

Bidding Services: Bidding services are only payable when the project is bid within the budget. If a project must be rebid due to the fault of the A/E, the fee for Receipt of Bids will not be paid until the project has been successfully bid. The A/E shall submit the items required by bidding and contract award, including the recommendation of award, construction contract fact sheet, and if required, the approved threshold inspection plan, prior to invoicing.

Construction Administration Phase: Construction administration services are paid monthly in proportion to payments made to the Contractor. The amount to be invoiced is determined using the Contractor's Certificate of Partial Payment. The "Adjusted Contract Amount" is divided into the "Completed to Date" amount to

administration services are paid monthly in proportion to payments made to the Contractor. The amount to be invoiced is determined using the Contractor's Certificate of Partial Payment. The "Adjusted Contract Amount" is divided into the "Completed to Date" amount to determine the percentage completed. The resulting percentage is then applied to the total Construction Administration fee to determine the amount due each month. The A/E shall also include a copy of the current Construction Phase Status Report. The fully executed Contractor's Certificate of Partial Payment is required as supporting documentation for each monthly invoice. The request for 100% of the Construction Administration fee must be accompanied by the fully executed Certificate of Contract Completion.

Post Occupancy Inspection: The fee for post occupancy inspection is paid upon receipt of the post occupancy report, as described in post occupancy inspection section.

Additional Services

A copy of the additional service authorization is required as supporting documentation. Unless phased payments are provided for in the authorization, the invoice shall not be submitted until the total services have been completed.

Reimbursable Expenses

Invoices for the printing and shipping cost of bidding documents shall be supported by a legible receipt.

An invoice for advertising costs shall be supported by a copy of the text of the advertisement, a copy of the invoice from the newspaper, and a statement from the newspaper certifying the legal ad was published.

If there are past due billings when the next invoice is prepared, services will not be invoiced for a second time. These amounts will be included in the "Less Previously Billed" column. Inquiries concerning the status of an invoice should be directed to the UCF Project Manager.

INVOICE APPROVAL PROCESS

Invoices are to be submitted to the UCF Project Manager, who will review and obtain necessary UCF approvals for payment.

B.9 Digital Information Management

The development and transfer of properly formatted digital information, including drawings, specifications, project information, and photos, is of significant importance to the University. Proper formatting and handling of this information determines the ability to the University to manage facilities information efficiently.

Technology, including hardware, software, and available tools for CAD, CAFM, and fabrication, change rapidly. Design professionals must plan to develop and present information in a way that is useful to the Owner. For this reason, UCF requires review of use and planning tools, including a BIM Execution Plan. It is the A/E's responsibility to review this information with the UCF Project Manager as part of the project orientation session or at a project kickoff meeting. The BIM Execution Plan shall identify the platforms for file exchange and storage, a BIM manager, discipline BIM leads, naming conventions, phase requirements, and coordination meetings.

DRAWING FORMAT REQUIREMENTS

Please note the following:

- For CAD projects, layering shall use the National CAD Standard. All layers required for correct plotting of a sheet, and only those layers, shall be visible when the sheet is saved prior to delivery. All XREFs, blocks, images, overlays, etc., are to be bound to each sheet file, to include all borders, common floor plans, and

complete title blocks.

- For BIM projects, vendors are to create and maintain models using the latest version of Revit and shall use titleblocks, families, schedules, and other information provided by UCF.
- Schedules and Metadata: It is the University's goal to use metadata to help maintain inventory lists of assets such as hardware, equipment, and furnishings. It is preferred that items shown on the drawings contain metadata that is used to generate the schedules. If the items specified are not the items installed, then the metadata shall also be changed on the as-builts.
- Fonts: All drawings shall use the Arial font, which must appear at a minimum of 1/8" in height on fullsize printed drawings.
- Notes, Dimensions, and Leaders: Dimensions shall be created using slash tick-marks 3/16" long; the extension line shall extend beyond the dimension line 3/16"; the dimension line shall not extend beyond the extension line; dimension lines shall be located 1/4" from the object being dimensioned; adjacent dimension lines shall be located 1/4" apart; architectural dimensions shall be indicated to the closest 1/16", unless design requires closer tolerances; text shall be parallel to the dimension line 1/8" in height and must be centered 1/16" above the dimension line, when practical. Notes and dimensions shall be legible and not overlap other drawing content.

Refer to Section D.0 for Document Organization and Drawing Requirements for additional information.

B.10 Critical Needs Checklist

The Critical Needs of UCF are highlighted in blue text throughout this document. The University requires that the design professional adhere to the Design & Construction Standards and that Critical Needs have been met. **CNB-3: The A/E shall certify that the Critical Needs applicable to each project are addressed as noted in the FPC4320 Professional Services Invoice.**

B.11 Construction Phase Services

The A/E shall provide construction administration services to ensure compliance with the contract drawings and specifications. These include:

Architect

- Construction Conferences: Participate in Owner/Architect/Contractor coordination meetings.
- Shop Drawing Review: Screen shop drawings and submittals for contract compliance before submitting to the Owner for approval.
- Keep logs of all on-site observations. Submit field reports to the UCF Project Manager, monthly at a minimum.
- Review Contractor payment applications, including Schedules of Values.
- Track clarifications and changes, and incorporate all drawing and specification changes into digital record documents.
- Review Requests For Information (RFI) and provide timely responses.
- Review Claims.

B.12 Occupancy and Project Closeout

SUBSTANTIAL COMPLETION

Substantial Completion is the milestone in the project when a building can be occupied for its intended use, as determined by

the A/E of Record. Substantial Completion shall not occur until all steps of the Substantial Completion procedure have been completed. A project cannot be occupied until the Certificate of Occupancy is issued by the Building Official. All warranties begin at the date of Substantial Completion.

FINAL COMPLETION

1. Final Completion is the milestone in the project when it is 100% complete and all steps of the Final Completion procedure have been completed.
2. **CNB-4: A project achieves "final completion" when:**
   - **All building systems are complete, operating correctly, and approved by the Commissioning Authority and the Owner.**
   - **All associated training is complete and approved by the Owner.**
   - **All closeout documentation, including O&M Manuals, must be complete, in digital format, and have been approved by the Owner.**
   - **As-builts of the completed project must be delivered to and accepted by the Owner.**
   - **Utility cost responsibility is transferred to the Owner.**
   - **The State Fire Marshal, the Building Official, and the University's Department of Environmental Health & Safety must have inspected, tested, and approved the facility.**
   - **The entire facility can be occupied and used for the designed purposes intended.**
   - **All University Operations Departmental Directors have signed the certificate of final completion.**
   - **All warranties must be accepted by the Owner to begin upon the date of final completion.**
   - **All punch-list items must be completed.**
3. **CNB-5: The Architect, with Owner approval, may issue the certificate of final completion only after all of the above conditions have been achieved.**
4. Refer to the PDC website (http://fp.ucf.edu) for the current Substantial/Final Completion procedure.

B.13 Post-Occupancy Inspection

The A/E shall schedule a post-occupancy inspection eleven months after Substantial Completion. Inspections shall be coordinated with the UCF Project Manager. The A/E shall prepare written reports of the inspection, describing all items found to be deficient and requiring corrective action.

The A/E shall provide the UCF Project Manager and the Contractor with this report. All items requiring corrective action will be addressed by the Contractor in a timely manner.

B.14 Record Documents

Record drawings and documents shall be supplied in the following formats:

- Full-size and half-size hardcopy of drawings in the quantities requested by the UCF Project Manager, formatted in accordance with Section D.0. Drawings must include all changes to the project throughout construction, in the format required by the contract (BIM or CAD). Hard copy drawings must be labeled on all sheets as "Record Drawings" and contain NO clouds or revision deltas.
- Electronic files in AutoCAD, Revit, or other format, as indicated per the BIM Execution Plan and the contract.
- PDF files, both as individual sheets and as a merged PDF file.
- Microsoft Word files (for written documents and specifications).

- Electronic submissions on electronic media acceptable to UCF (flash drive, CD, etc.).

Planning, Design and Construction (PDC)

The mission of the UCF Planning, Design and Construction Department is to ensure that the quality of UCF's physical environment supports the University's standards in teaching, research, service, and campus life; to excel in project delivery through leadership, integrity, passion, and excellent customer service; to create an exciting and safe campus environment for UCF students, faculty, and staff to learn, teach, work, and play; to minimize the life-cycle cost and environmental impact of UCF facilities, while maximizing sustainable and maintainable standards; and to maintain a departmental culture of respect and dignity where individuals are encouraged to lead, learn, and grow.

Facilities Operations (FO)

Facilities Operations is focused on operating and maintaining the buildings and assets, both on our main campus and remote campuses, that make UCF a great place to live and learn. They implement preventative maintenance programs and perform corrective maintenance work to ensure that every building is safe, functional, clean, and attractive. They also support all recycling efforts by students and faculty. Facilities Operations is composed of Housekeeping, Maintenance, and Recycling.

Utilities and Engineering Services (UES)

Utilities and Engineering Services' mission is to obtain energyefficient operations of building systems through education, optimization, implementation, and verification, while providing professional leadership and fostering sustainable growth. UES is responsible for providing and supporting a wide variety of mission-critical services at the University, including green building accreditation, commissioning, building automation system specification, integration, enterprise management, and utilities and energy management services for all campus buildings, comprising of 7.8 million gross square feet of conditioned (both cooled and heated) space, across UCF's 1,415 acre main campus.

Landscape and Natural Resources (LNR)

Landscape and Natural Resources enriches the community by creating and maintaining an inviting and sustainable outdoor environment, providing high-quality service for operational activities, and generating research and educational initiatives that guide conservation and stewardship of natural resources.

Environmental Health and Safety (EH&S)

Environmental Health & Safety promotes a culture of safety, health, and environmental protection, in collaboration with the University community, to support education and research. They are dedicated to reducing injuries, accidents, and environmental impact, while ensuring compliance through high-quality training, comprehensive workplace evaluation, hazardous materials management from acquisition to disposal, managing regulatory information, and minimizing future potential liabilities.

Office of Instructional Resources (OIR)

OIR designs, selects, and installs multimedia systems and equipment across all UCF campuses to maintain a consistent experience for faculty and students in all our learning spaces. OIR is also closely involved in the Technology Fee project

process since many of these projects have a multimedia component.

Information Technology (UCF IT)

UCF IT, an operating unit within the Information Technologies and Resources Division, provides central information technology resources - including software, databases, computer networks, telephones, and staff - to support the academic, research, and business activities of the university. FP&C coordinates closely with UCF IT on all projects that require telecommunications infrastructure and/or services. UCF IT is the sole provider of telecommunications systems and is responsible for their design, standards and guidelines, installation, operation and maintenance.

THIS PAGE INTENTIONALLY LEFT BLANK

C Design Guidelines

This section includes:

C.1 Design Principles

C.2 Design Review Process

C.3 State Fire Marshal Review and Approval

C.4 Research Area Planning and Renovations

C.5 Confined Space Design

C.6 Professional Services Guide

C.7 Environmental Health and Safety Construction Information

C.1 Design Principles

All work done at UCF is in support of the academic, research, and service mission of the University. A campus environment is a forum for social and intellectual exchange. Both outdoor and indoor spaces shall be designed in a manner to promote this exchange, provide for security, and accomplish University goals in a pleasing manner.

UCF facilities include a broad variety of building types, including academic, administrative, research and laboratory, housing, and service buildings. The specific needs of each facility are described in the facility program for the individual project and are discussed during the early design stages with the Architect/ Engineer. An ongoing and open dialogue between the design professional and the UCF Project Manager is encouraged.

Architects, Engineers, and Contractors must adhere to all American Society for Testing and Materials (ASTM), American National Standards Institute (ANSI), Florida Building Code (FBC), Florida Fire Prevention Code (FFPC), American Society of Heating, Refrigerating, and Air-Conditioning Engineers (ASHRAE), National Electric Code (NEC), and Leadership in Energy and Environmental Design (LEED) standards as well as Florida Board of Governors Regulations and Statutes as they apply to the work and as noted in the Professional Services Guide and all UCF Policies (http://policies.ucf.edu/).

The design principles that follow are all important:

Building Orientation: The overall facility and site design shall fit aesthetically with other facilities on campus. Building entrances shall be visible. Buildings are frequent meeting and gathering places on campus and shall be oriented to serve that function in a compatible way with adjacent outdoor spaces. Areas devoted exclusively to building loading and services, trash removal, or mechanical equipment shall be designed so that their visibility from public areas is minimized. Rooftop mechanical equipment shall be enclosed in structures that are integrated into the building design, where possible.

Overall Economy: UCF constantly seeks ways to reduce construction costs. However, because lowest first cost does not necessarily mean lowest total cost, life-cycle cost evaluations are an important component of the design process. Examples of elements where lowest first cost may not necessarily equate to lowest ultimate or life-cycle benefit include walls and floor finishes, ceiling accessibility, window treatments, partition systems, HVAC systems, and energy conservation systems. Life-cycle cost evaluations shall be presented during design.

The UCF Standards require a level of performance against which a project can be developed. Designers are encouraged to make suggestions for alternate approaches that meet or exceed these Standards, as may be justified by engineering factors, operational criteria, or cost. Among the operational factors to be considered in designing building systems are:

- Functionality
- Reliability and long life
- Energy conservation
- Minimized maintenance requirements
- Accessibility of mechanical and electrical components for maintenance and repairs
- Stocking and availability of replacement parts

CNC-1: The work of the A/E will be reviewed by UCF to the extent necessary to establish conformance with authorized scope and applicable UCF design criteria. It is the responsibility of the A/E, acting in a professional capacity, to ensure the accuracy, completeness and correctness of project documents and details of the work. The A/E assumes full responsibility for the technical accuracy and professional adequacy of all work.

Appropriate Materials: Glazing, metal panels, and brick are the predominant exterior materials on the UCF campus and act as unifying elements for campus aesthetics. In addition, complementary or contrasting materials are used to indicate special-use purposes or importance of some structures.

All materials specified on a project should be investigated thoroughly. **CNC-2: The use of untried materials and mixed components of systems are prohibited. Any design for partial system replacement must have a statement from the Engineer of Record that states that the replacement equipment is comparable with current control systems being used and the Facilities Operations director's signed approval prior to the construction phase of the project. Materials shall be used in a manner that will afford the maximum service at the lowest comparable cost.** Operation and maintenance costs shall be weighed against initial costs to achieve maximum economy.

Within Available Funds: The budget prepared by the University establishes the maximum funds available for the project. The A/E is charged with incorporating all items shown in the facility program, utility connections, and site work, including but not limited to: general construction; plumbing; heating, ventilating, and air conditioning; electrical; and fixed equipment, within the available construction funds. The A/E shall continually monitor program requirements to ensure that the project is designed within available construction funds. Estimates of costs shall be projected to the proposed date for start of construction. If the approved facility program and the available construction funds appear to be incongruous, the A/E shall inform the UCF Project Manager immediately. The UCF Project Manager shall arrange a meeting with the A/E for the purpose of reviewing priority requirements. If redesign is required due to bids being in excess of available funds, it is the A/E's responsibility. No additional fees shall be approved for such redesign, unless the scope of the A/E's work is changed by amendments to the approved facility program.

Proper Noise and Vibration Control: Acoustic mitigation shall be incorporated to maintain the quality of the campus environment. Noise and vibration (emission and transmission control) are the responsibilities of the A/E and must be considered in the design of every building. The following three principal considerations shall be given to noise and vibration control:

- Noise control to provide for maximum usefulness of the facility by keeping levels of sound within ranges that are conducive to study, work, or other uses for which the facility is designed;
- Noise control in compliance with OSHA requirements for the health and safety of building occupants; control shall be for all areas of the facility, particularly equipment rooms, boiler rooms, PRV stations, and fan rooms;
- Vibration control to limit sound and motion produced by equipment, and for protection of the equipment and the building structure.

Responsible Use of Energy and Natural Resources: As a leader in higher education, UCF has made a commitment to the stewardship of environmental resources. It is the responsibility of the A/E to ensure the requirements established within the Construction Requirements of the Energy Sustainability Policy (3-111) are achieved. All new major construction projects must follow the UCF Green Building Construction and Renovation Requirements.

The A/E shall identify and make recommendations to incorporate construction design, techniques, products, or other principles, which will further enhance operational sustainability and reduce energy consumption of the project.

CNC-3: All major new construction and renovations must include progressive energy modeling. The energy modeling must be updated as the project progresses from

programming through completed design. The energy model inputs, outputs, reports, and findings must be reviewed with the Commissioning Authority and the Director of Utilities & Engineering Services prior to proceeding to the next phase of design. The initial model must be updated at the completion of the 100% Design Development phase, 50% Construction Document phase, and 100% Construction Document phase.

CNC-4: All construction projects with any potential Utilities scope (list specific departments here e.g. CHW, HVAC, etc) shall be evaluated for utility impact. The designer of record shall complete and-submit the UCF Application for Concurrency Review and provide to the UCF Project Manager to submit prior to the 100% Design Development Phase submittal. Concurrency Certificate must be verified against 100% Construction Document Phase Submittal by the UCF Project Manager and issued prior to the start of construction.

Crime Prevention Through Environmental Design (CPTED): The built environment is known to have a dramatic effect on behavior. The UCF Office of Public Safety is committed to the use of CPTED principles to discourage unwanted behaviors and incorporates CPTED into project reviews. Architects shall be familiar with and incorporate CPTED principles into project designs.

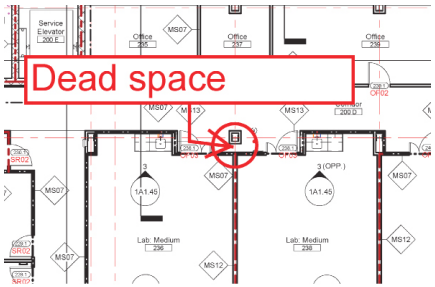

Art in State: The Art in State Buildings (ASB) Program acquires artwork for new public facilities built with state funds. The program requires that up to 0.5% of the construction appropriation be set aside to acquire artwork for permanent display in, on or around the facility. These may be integral to the building (e.g., murals or artistic expressions in spaces), works purchased for permanent display in particular locations, or works commissioned for the structure. Whenever possible, projects should strive to include art that is somehow reflective of the building's use, local history, local culture, or the local environment. An Art in State committee will determine the art for each state-funded project.

Interior Design: The A/E is responsible for the fully integrated design of the facility. Integrated design is defined as the thorough and complete development of the design concept, with proper attention being directed to all aspects, both functional and aesthetic, of the design. As a part of basic services, the A/E will be required to provide interior design services. At the option of the University of Central Florida, the A/E may be required to provide furniture selection as an additional service.

Green Roof Consideration: **CNC-5: Implementation of a modular green roof and associated storm and condensate water capture must be considered and evaluated for all new University buildings. The decision to proceed with the design and development of the green roof, including additional requirements, will be made at the Advanced Schematic Design phase. Costs associated with the green roof must be presented to the UCF Project Manager for review. The evaluation must include the following requirements:**

- **The cost for the enhanced structure and roof membrane required for the green roof and associated walkways and safety features.**
- **The cost for the actual green roof system, apart from the other building elements, including installation.**
- **The effects of the green roof on the building's roofing and drainage system, especially the roof warranty.**
- **The cost for any associated storm water system that may be required.**
- **The cost for the long-term maintenance of the green roof.**
- **A detailed summary of all costs for the proposed green roof system to quantify a total cost.**

Knight Notes

Space Use

ADA spaces typically require a chair, chair stowage, and accessible writing surface to be included in registerable capacities. New HVAC systems shall be designed for the maximum occupancy. See D.23 for additional criteria for shell space and use changes. At no time shall occupancy be modified beyond the HVAC system's ability to meet demand.

- **A life cycle cost analysis using the total cost and the total energy savings.**

Accessibility: UCF is committed to providing buildings and public spaces that accommodate members of the campus community that have disabilities. Project design shall address accessible accommodations in a fully inclusive manner. All primary entrances to buildings and multi-stall public restrooms must have ADA push-button door actuators with a mounting height of 36" for the operator, unless otherwise required by code.

Space Use: Every design shall provide occupancy information for all new spaces created and for existing spaces that are modified in size or use by the project. All spaces shall reflect the basis of design occupancy factor and indicate the maximum occupancy allowed by code and the proposed occupancy as furnished and or used with detailed notations for ADA and instructor allocations.

Domestic Equipment: **CNC-6 All equipment installed in UCF buildings will be designed for domestic use and will include any programming required to control such equipment. Overseas compatible equipment will not be accepted.**

Conformance with the Campus Master Plan: All facilities constructed on the main campus shall be designed in conformance with the Campus Master Plan. The Campus Master Plan consists of seventeen elements. Each element contains the Master Plan Goals, Objectives, and Policies, with the corresponding maps and figures. Additionally, for reference purposes, the Data and Analysis for each element has been included as a separate section, following the Campus Master Plan Goals, Objectives, and Policies section. Refer to the Planning, Design and Construction website for our current Campus Master Plan.

C.2 Design Review Process

Design submissions typically include Schematic Design (Conceptual and Advanced), Design Development, 50% Percent Construction Documents, 100% Construction Contract Documents, and a conformed set of Construction Documents, to include adjustments in response to bidding and permit comments.

For each phase submittal, the A/E shall include information in sufficient detail for a technical review by UCF University Operations departments. All items in each submission shall include the date and phase of design of submittal, the A/E's name, the project title, and the construction contract number. Engineering calculations shall be legible, neatly arranged, bound, and indexed.

During the design review process, it is the goal and general practice of the University to review and comment on plans in a timely manner.

PDC shall reject incomplete submissions lacking material required by these Standards. Each submittal, in order to receive proper and timely consideration, shall contain all needed project information.

- **Drawings and specifications shall contain a complete description of the project and should explain how the total work will be accomplished.**
- **Basis of Design shall describe how the Owner's Project Requirements shall be achieved.**

The A/E shall submit the Design Phase Submission Report at each project milestone and receive formal approval and comments prior to starting the next design phase. This approval shall be coordinated by the UCF Project Manager and must include approval by PDC, the UCF Standards Committee, and the Associate Vice President of Administration and Finance (University Operations).

C.3 Code Review and Permitting

For all construction and renovation projects, the A/E shall be responsible for submitting signed, sealed, and dated drawings to the UCF Building Department (BD). If State Fire Marshal (SFM) review is required, the UCF BD will transmit the documents to SFM for approval prior to construction. All SFM communications must go through the UCF BD office.

The BD and SFM (where applicable) stamped, approved drawings shall be kept on the construction site for the duration of the project. Changes to these drawings shall be submitted to the BD office for review and approval.

The Contractor shall submit the necessary online requests or paperwork to schedule inspections through the BD office. State Fire Marshal inspections where required are scheduled separately, directly with the local office. Coordination is needed to ensure all SFM witness required activities are properly scheduled. Final building inspections are not to be made until all other inspections have been passed. There will be a charge for re-inspections beyond those included in the plans review fee.

C.4 Research Area Planning and Renovations

IMPORTANT POINTS TO ENSURE SUCCESSFUL RESEARCH PROJECTS

UCF's Department of Environmental Health and Safety works closely with PDC to ensure that facility changes meet all applicable code and safety requirements. When considering new research projects, the work space shall be reviewed to determine if it is appropriate for the proposed process. When room modifications are needed, they are requested using a UCF Minor Projects (MP) request. The following points identify the major considerations to help avoid delays in the MP process:

1. Design documents must provide sufficient details to describe fully the scope of needed services on the MP request. All phases of work, including future research, will be considered. Be aware that lack of sufficient information will delay document reviews.
2. If the project or process requires the use of chemicals, fuels, compressed gases, or hazardous materials, or if the process generates air contaminants, a ventilation review of the room shall be required, even if existing processes are already present in the space. Other room design parameters shall also be reviewed, such as safety shower/eye wash access, appropriate flooring, adequate electrical safety features, etc. Attempting to retrofit a process in an inappropriate space is the number one hurdle to achieving success in moving a research project forward.
3. Many spaces have previous site conditions that will be impacted by a change or addition. For example, locations in which chemicals and other hazardous materials have previously been used may require decontamination prior to commencement of work. Equipment that produces heat load shall trigger HVAC upgrades. Older facilities may have asbestos-containing materials or insufficient electrical capacity. These types of projects shall require comprehensive evaluations and upgrades in new designs.

Design consultants should be aware that all building or system deficiencies caused by the occupant must be rectified (and funded) by the occupant. For scopes of work that include facility condition assessments, the design consultant should attempt to explain the cause of any such deficiencies.

Additionally, the funding and maintenance of all research systems are the responsibility of the individual department to provide funding for all initial construction and ongoing maintenance.

C.5 Confined Space Design

The design of a confined space shall include a comprehensive evaluation of all potential hazards. If the hazardous condition

cannot be eliminated, engineering controls shall be implemented to minimize them as much as possible. This shall include, but is not limited to, mechanical ventilation, safe means for entry or exit, slip resistant floor, adequate illumination, and other similar controls. Hazardous materials or gases shall not be stored inside confined spaces. Alternative arrangements must be approved by EHS.

C.6 Professional Services Guide

CNC-7: The requirements contained in the UCF Professional Services Guide must be followed regarding final cleaning, adjusting of equipment, project record documents and close out procedures.

Refer to the UCF Professional Services Guide for additional requirements.

C.7 Environmental Health and Safety Construction Information

Refer to the Environmental Health and Safety Construction Information document from EH&S regarding additional information and requirements.

D

Standards and Technical Requirements

0

Division 0 - Procurement and Contracting Requirements

This section includes:

Introduction

Document Organization and Drawing Requirements

Cover Page

List of Drawing Sheets

Graphic Standards

Instructions for Procurement

Procurement Forms and Supplements

Introduction

This section addresses core requirements that the design professional (A/E) shall consider in preparation of contract documents. The information contained herein should be reviewed in conjunction with requirements contained in Section B – Working with UCF and Section C - Design Guidelines.

Document Organization and Drawing Requirements

1. Drawings prepared for use on UCF projects shall comply with the State University System Board of Governors Requirements. Required information shall be included in contract documents and arranged in a logical manner.
2. Construction drawings shall be prepared using AutoCAD, Revit, or another pre-approved software program. When Building Information Modeling (BIM) software is used, a BIM Execution Plan must be prepared, in accordance with Section C - Project Delivery. Deliverables shall be provided as .pdf, .dwg, .rvt files, and/or other formats specified by the project agreement.
3. To facilitate review for code compliance, all applicable building and life safety code design data, including exit locations, path of travel, occupant load, design loads, assumed conditions, and gross and net square footage calculations, Fire Department access and fire lanes, etc., shall be shown on Life Safety documents.
4. **CN0-1: Project drawings will be final and complete with all elements thoroughly checked and coordinated.**

Cover Page

The cover page for drawings should be simple and uncluttered, and shall contain the following information:

- University Name
- State Project Number
- Project Title
- Project Location Map
- Name, Address, and Telephone Number of Architect/ Engineer and Key Consultants
- Date of Issue and Revision Dates
- Educational Plant Survey Comparison to Project Square Footage

List of Drawing Sheets

The typical order of sheets shall follow the Uniform Drawing System (UDS) contained in the National CAD Standard:

1. All construction drawings shall be formatted to print on a standard ANSI Arch E1 sheet size (30” x 42”). Specific deliverables, including number of review and record copies, should be confirmed with the the UCF Project Manager. All sheets included in a submittal set shall be the same size.
2. Drawing volumes shall not exceed 100 pages.
3. The title block information on each drawing shall appear on the right side of each sheet, or on the bottom of sketches. The basic organization of title blocks on all sheets following the volume’s cover page must be the same across the entire project.Required Title Block information includes:
   - University Name
   - State Project Number
   - Project Title
   - Sheet Title/Name
   - Phase of Project Development (i.e. Schematic Design, Design Development, 50% Construction Documents, etc.)

- Name and Contact Information (address, phone, email address) for Architect/Engineer
- Sheet Number (always in the lower right hand corner)
- Date of Issue and Revision
- Initials of Preparer
- Initials of reviewer
- Date of Review
- Name and Contact Information (address, phone, email address) for Consultant (when applicable)

4. All plans, elevations, sections, details, etc., shall be titled.
5. All drawings shall include a graphic scale given as an example of the object drawing (i.e., scale 1/8" = 1'-0").
6. Each drawing requiring permit and/or bid shall be appropriately signed, sealed, and dated by the responsible professional.

Graphic Standards

To ensure maximum legibility of construction documents, the following graphic standards "best practices" must be followed.

1. All symbols shall be clearly separated from one another and from adjacent lettering or lines.
2. Lettering shall be vertical uppercase and shall be plain and legible; minimum size shall be 1/8".
3. Cut lines must be used for enlarged sections and details. Cut lines should be located through parts of the drawing where the building is actually "cut", typically the interior portion of the building. Cut lines should not extend more than 1/4" past the outside portion of a cut element.
4. Lineweights for all drawings must be properly drawn, showing the outside of cut elements with a bold line-type and inside elements as thin line-types.

Instructions for Procurement

The Project Manual template provided in the Appendix provides detailed instructions related to bidding. Conditions of the Contract, including the Standard State of Florida General and Special Conditions of the contract provide the basis for structuring the responsibilities for all contractual parties. Bidding Documents include the Invitation to Bid and various instructions for the bidders, as well as proposal forms and requests for submittal of certificates confirming the Contractor's compliance with Contract Documents. **CN02: Changes must not be made to the General or Special Conditions, without written approval from the Owner.**

TRADITIONAL DESIGN/BID/BUILD

1. Upon completion of the 100% Construction Documents, UCF shall advertise a project for bid. Florida Statute requires that construction bids be advertised for a minimum of 30 days, however, a longer period may be desirable.
2. The A/E shall pre-qualify bidders in compliance with the UCF bid manual. Bidders who fail to pre-qualify will not be considered for project awards.
3. The A/E will provide bid documents to the Contractor after UCF has confirmed that the Contractor has completed the UCF Non-Disclosure Agreement and the UCF Document Request Form.
4. Bid date, time, pre-bid meeting (if needed), site visit (if needed), and location of bid openings shall be determined by the UCF Project Manager.
5. The call for bids for all construction projects shall be advertised in the Florida Administrative Weekly thirty (30) days prior to the bid date. The UCF Project Manager serves as the Bidding Official, as prescribed in UCF procurement requirements. The A/E shall consult with the UCF Project Manager to verify bid date or any changes to the bid date. The A/E shall promote exposure of the project to qualified bidders to encourage competition.

The A/E shall also cooperate in providing information for advertisements as may be required by UCF procedures, State University System Board of Governors regulations, and by state law. The use of virtual plan rooms is encouraged. The cost of any document reproduction shall be borne by the bidder.

6. A limited number of alternates may be used as a means of ensuring base bids within the available construction funds. Only additive alternates shall be used. The A/E shall consult the UCF Project Manager regarding priority of alternates. Proposed alternates shall be clearly defined, listed in priority of need, and shall be discussed with the Owner.

7. During the bidding period, the A/E shall issue addenda as necessary to clarify or modify the construction documents. The A/E shall not issue oral explanations or interpretations. Addenda shall be issued in accordance with the Instructions to Bidders section of the Project Manual provided in the Appendix. Copies of all addenda shall be transmitted to the UCF Project Manager prior to or concurrent with release to bidders.

8. The A/E shall provide a knowledgeable and responsible representative to be present at bid opening. The A/E representative shall act as the Bid Official's recorder for the tabulation of bids.

The Owner may be providing insurance on the project through the Owner Provided Insurance Program (OPIP). Consultants need to check with the Owner to determine which insurance coverage is to be provided and which of the Owner's supplements to the Project Manual should be included.

Procurement Forms and Supplements

The current Bid Tabulation forms, by proposed contract type, are available on the Planning, Design and Construction website.

The UCF Project Manager, or another designated representative of the University Operations team, shall provide a written Notice to Proceed. For projects with a construction value of greater that $2M, the Vice President for Administration & Finance (University Operations) and the President shall approve any recommendation for award made by the A/E and the Director of Planning, Design and Construction.

References:

National Institute of Building Sciences National CAD Standard version
http://www.nationalcadstandard.org/ncs5

State University System Board of Governors Regulation 14.021: Procedures for Construction Contract Bidding and Award for Contractor eligibility, post-bid requirements, and emergency procedures. *http://www.flbog.edu/documents_regulations/regulations/14%20021%20Bidding%20Procedures.pdf*

UCF Planning, Design, and Construction http://fp.ucf.edu

THIS PAGE INTENTIONALLY LEFT BLANK

1

Division 1 - General Requirements

This section includes:

Introduction

Summary of Work

Access to Site

Alternates

Project Management and Coordination

Construction Progress Documentation

Submittal Procedures

Special Procedures

Owner Safety Requirements

(cont'd on Page D.1-2)

Introduction

This section covers Contractor payment procedures, Contractor administrative requirements, quality requirements, and Contractor performance requirements that must be understood by the Architect/Engineer (A/E) and communicated to the Contractor through the contract documents. The Owner is to be held harmless for any injury or damage related to the construction site. *For information related to A/E requirements, also refer to Section B - Working with UCF and Section C - Design Guidelines.*

Summary of Work

1. All work by Contractors on UCF projects shall adhere to UCF policies and various applicable standards and codes, (e.g., ASTM, ANSI, FBC, FFPC, ASHRAE, NEC, and LEED).
2. **CN1-1: All projects shall abide by the University Energy Sustainability Policy 3-111.1. ~~This policy requires that all projects achieve a minimum LEED Gold certification and earn specific LEED credits.~~**
3. **CN1-2: All designs must be consistent with the University's Master Drainage Plan approved by the St. Johns River Water Management District (SJRWMD). The Architect and Engineer must comply with the design and installation requirements as established by the Florida Department of Environmental Protection.**
4. A general description of elements of the project, including exterior work and any other related work, shall be provided. This description shall indicate the scope of work so that prospective bidders can decide whether or not they wish to bid on the project. The use for which the project is being built should be explained.
5. Cutting and patching shall be identified in detail. This includes the incidental cutting, fitting, and patching required to complete the work or to make several parts fit together properly.

Access to Site

1. Unauthorized visits to the construction site are prohibited. Anyone visiting the site is required to obtain approval from the UCF Project Manager. Warning signs shall be posted to assist in the enforcement of this requirement.
2. The Contractor shall secure the building site and provide keys to the UCF Project Manager and the UCF Police Department, and will provide three Contractor emergency contacts.
3. The Contractor shall keep gates locked at all times except during working hours.

Alternates

CN1-3: The A/E shall consult the Owner regarding priority of alternates. Only additive alternates shall be used. Proposed alternates shall be clearly defined, listed in priority of need, and discussed with the Owner. *See Instructions to Bidders in Division 0.*

Project Management and Coordination

1. If other work outside the scope of contracts for this project is being performed simultaneously with the work on this project, it is understood that Contractors shall cooperate with outside Contractors and with the Owner to avoid interference with each other's work.
2. The Owner may furnish items to be installed by the Contractor. A list of Owner-furnished items, including manufacturer number and pertinent specifications, shall be presented to the Architect for incorporation into the design for installation by the Contractor.
3. Specific guidance for a project shall be given with provisions for future Work such as additions, installations of special equipment, or other such tasks. Requirements of this contract that are critical to future work (such as

Division 1 Contents

(cont'd from Page D.1-1)

Health, Safety and Emergency Response Procedures

Indoor Air Quality Procedures

Quality Requirements

Temporary Facilities and Controls

Field Offices and Sheds

Vehicular Access and Parking

Temporary Barriers and Enclosures

Temporary Erosion and Sediment Control

Temporary Storm Water and Pollution Control

Project Identification and Signs

Execution and Closeout Requirements

Project Record and As-Built Documents

Operations and Maintenance Data

Waiting Space

Lactation and Mothers Room

Commissioning

Attic Stock

structural provision, utilities, areas of the site to be kept clear, or site preparation) shall be described. Areas of work (such as piping, ductwork, and conduit) that may be extended in future Work without necessitating a system shutdown shall be identified.

4. Job conditions affecting phasing and scheduling of the work shall be described. Particular attention shall be given to scheduling remodeling work in buildings that will remain in operation during remodeling. Consideration shall be given to:
   - Providing and maintaining means of ingress and egress
   - Maintaining security
   - Use of docking facilities
   - Shipment of construction materials to the job site
   - Storing of construction materials (not at the UCF warehouse)
   - Scheduling for moves by the user
   - Maintaining services
   - Dust control and noise control
   - Coordinating with the UCF Project Manager and the department's property custodian to facilitate disposition of surplus items within the space prior to the renovation.

Construction Progress Documentation

CN1-4: All projects shall be documented at major construction milestones such as foundation installation, slab pours, wall erection, MEP rough-in, etc. Photographs will be taken in each room, to include walls and above the ceiling.

Submittal Procedures

1. Before the start of construction, the Contractor shall prepare a submittal schedule for review and approval by the A/E and the Owner. The UCF Project Manager shall identify submittals that require Owner approval. The Owner shall be copied on all submittals but does not need to approve unless the submittal is identified on the Owner submittal schedule.

2. All submittals shall be provided as one package for each division for review and approval, with the exception of Divisions 23, 25, and 26, which will be by trade. For items requiring Owner approval, the Owner shall have a minimum of one week to provide comments to the Architect before the Contractor is released to purchase the equipment. The Architect shall approve the submittal packages before the submittals are sent the Owner. **CN1-5: The Contractor shall provide a submittal review schedule and a sequence of submittal review to the Owner.**

Special Procedures

1. The A/E shall specify in the "Project Summary" accompanying the Invitation to Bid and in the contract specifications that the University reserves the right to remove salvage prior to start of construction, or in certain instances, the Contractor is to turn over certain items of salvage to the Owner.

2. On all projects involving demolition and/or renovation, the A/E shall review with the UCF Project Manager the possibility of salvage of materials and equipment, either for use in the remodeling project, by Facilities Operations, or the UCF surplus program. The UCF Project Manager shall notify the A/E of materials and equipment to be removed by the Owner or to be turned over to the Owner by the Contractor. Non-reusable materials shall be removed from campus and recycled when possible before disposal by the Contractor.

3. The Contractor and all subcontractors shall provide suitable-sized, weather-tight containers to store and avoid damage to materials required on the site. Outdoor storage of materials shall be within the construction fence. Temporary structures shall be painted with one coat of paint; color must be approved by the Project Manager. No signs except small identification signs are permitted on sheds. Indoor storage shall be confined to unused spaces in the building, corridors, and stairs. Storage in other public spaces is prohibited.
4. Spaces shall be made available to the Owner for storage of equipment.

Owner Safety Requirements

1. The Contractor will perform all work in accordance with OSHA standards; safety orders issued by OSHA; and the UCF Director of Environmental Health and Safety (EH&S); and any other safety, health or environmental regulations having jurisdictional authority in the State of Florida.

   Among significant concerns are that:

   - All walkways and working surfaces, such as ladders, stairs, guards, etc., shall comply with OSHA regulations.
   - The Contractor shall take all precautions necessary, as defined by OSHA, for the safety and protection of persons and property.
   - The Contractor shall inform the Owner of the "competent person," as defined by OSHA.
   - The Contractor shall not load or permit any part of the work to be loaded so as to endanger safety.
2. The Contractor shall review the Environmental Health and Safety Construction Guidelines. The Contractor shall ensure that the construction site under its control adheres to the items contained therein. All construction sites are subject to inspection by UCF representatives and federal or state agents. The Contractor is responsible for all fines incurred due to the failure of its employees and subcontractors to follow federal or state regulations. Failure to follow UCF Environmental Issues Construction Standards can result in stop work orders or other penalties.
3. Crane, forklift, or other heavy equipment operators shall be trained and certified. Flagmen are required, as designated by the United States Department of Labor, Occupational Safety & Health Administration's Manual on Uniform Traffic Control Devices (MUTCD)
4. **CN1-6: Lock out/tag out procedures are required to be used in all campus facilities.**
5. **CN1-7: All Contractors shall attend a one-hour annual session covering UCF Environmental Management System construction-specific components and provide certification that the information has been transmitted to all affected employees and sub-Contractors.** UCF Environmental Management System construction forms shall be used for documentation and will include the Contractor EMS Agreement and Contractor Hazardous Material/Waste Inventory forms.
6. A complete list of hazardous substances to be used on the project shall be submitted prior to the arrival of the subtance on UCF property, using the Contractor Hazardous Material/Waste Inventory Form. Safety Data Sheets shall be made available when requested. Less toxic alternatives shall be used wherever possible.
7. All containers of hazardous substances and waste, including new and used petroleum products, shall be stored in a covered area on an impervious surface. Outside storage shall be in rain-tight, secondary containment. Hazardous substance or waste storage shall be secured.
8. Hazardous substances used in occupied spaces shall require the Contractor to prepare and follow a ventilation plan. The plan shall be submitted to a EH&S representative for approval prior to use of the substance.
9. The University is registered as a Large Quantity Generator

Knight Notes

UCF Building Department

All renovations, remodels, additions, alterations, or new construction on any UCF campus, whether performed by internal or external entities, shall be approved by the UCF Building Official to ensure compliance with building and fire codes. The Building Department Official is the authority for all building code issues at the University and is the UCF liaison with the State Fire Marshal, who is the legal authority for all fire code issues.

(LQG) of hazardous waste. All hazardous waste generated shall be handled per the UCF Management System. In general, 40 CFR, parts 261 thru 270, and Florida Administrative Code (FAC) 62, parts 730 and 731, shall be followed.

10. A UCF representative shall verify that all hazardous waste is properly managed prior to its transportation off campus. The UCF EPA ID number shall be used on all manifests. Transportation and disposal facilities must be pre-approved by an EH&S representative. Alternatively, approved waste may be disposed through the University hazardous waste program at a charge to the project.
11. All spills shall be cleaned up immediately. Discharges to pervious surfaces, sanitary or storm water conveyances, or bodies of water shall be reported to EH&S upon discovery.
12. Asbestos or any building material containing asbestos shall not be used. If asbestos will be disturbed during renovation activities, abatement of such materials shall be coordinated with the Department of Environmental Health and Safety.
13. All electrical transformers, switches, ballasts, or other electrical equipment that contains polychlorinated biphenyls (PCB), or other equipment which has come in contact with PCB, shall be properly disposed of in coordination with EH&S.
14. Any hazardous or toxic material, such as asbestos or PCB, that is discovered during the course of a project shall be reported **immediately** to the UCF Project Manager. All Work involving suspected asbestos, or hazardous or toxic materials, shall halt immediately and must not resume until the notice to resume work has been issued by the Project Manager.

Health, Safety, and Emergency Response Procedures

1. For any emergency affecting the safety of persons or property, the Contractor shall act to prevent potential damage, injury, or loss. Notification of such occurrences shall immediately be made to the University Police Department.
2. The Contractor shall provide a written, severe weather plan to the Owner prior to the start of any construction activity.

Indoor Air Quality Procedures

During construction operations, especially those involving demolition or renovation, appropriate measures are required to maintain acceptable air quality levels. Any activity generating dust, debris, or pollutants shall be performed in unoccupied areas. If this is not possible, the Contractor shall be required to ensure proper isolation of all such dust, debris, or pollutants. The Sheet Metal and Air Conditioning Contractor's Association's (SMACNA) IAQ Guidelines for Occupied Buildings Under Construction shall be followed.

Quality Requirements

1. **CN1-8: A quality control and quality assurance plan shall be provided and implemented by the Contractor.**

Before construction begins a detailed plan describing the systems, adequacy, and competency of the construction inspection program shall be submitted to the UCF Project Manager by the Contractor. UCF has the right to add specific systems or equipment to the plan. If the plan is deemed not to meet the needs of the University, a new plan shall be created to meet the University's needs.

The construction quality plan must include:

- A detailed construction schedule, with a summary of planned construction activities, their sequence, interrelationships, durations, and terminations.
- A description of the construction management organization, management procedures, lines of communication, and responsibility.

- A description of the anticipated quality control testing, to include the system, the type of test, frequency, and who will perform the tests.
- A description of the change order process, including names of those authorized to initiate, review, negotiate, and approve change orders.
- A description of the process to store, update, and maintain construction documentation records: plans, specifications, as-built drawings, field orders, and change orders.
- A description of the quality plan, to include inspection responsibility, anticipated inspection frequency, deficiency resolution, inspector qualifications, and inspection reports.
- Acknowledgment of compliance with standards for applicable industry association, trade group, or federal standards.
- Areas specified that require evidence and examples of required expertise from the Contractor in conjunction with specified items, such as system components, design elements or special treatment.

2. The following codes and standards must be followed:

- Florida Building Code
- Florida Accessibility Code
- Florida Fire Prevention Code (FFPC)
- National Electric Code (NEC) (NFPA 70)
- American National Standard Safety Code (including handicapped requirements)
- Department of Education Criteria Codes
- Sheet Metal and Air Conditioning National Association and other specific codes related to the project
- Barrier Free Design
- Fair Housing Act Requirements Refer to Professional Services Guide Supplement for additional codes, standards, and requirements.

3. **CN1-9: All testing must be performed by the Contractor unless otherwise directed by the Owner.**

Temporary Facilities and Controls

1. Specifications prepared by the A/E shall include requirements that the Contractor adequately protect the work, adjacent property, the public, and the Owner's property from injury or loss arising in connection with the construction contract, and that the Contractor is responsible for any damage or injury due to the Contractor's act or neglect. Adequate barricades, nighttime lighting, and flashers shall be used to protect the public.
2. The A/E shall specify modifications regarding payment for water, fuel, chilled water, and power consumed. The Contractor's utilities are required for the progress of the work. Specifications shall be written to stress this point. The General Contractor shall make arrangements with the UCF Project Manager for installation of temporary lines.
3. The A/E shall provide information to avoid damage to existing underground lines. Drawings indicating the approximate location of all known lines shall be furnished by the Owner. The A/E shall verify and indicate all existing utilities on contract documents. All activities are subject to Sunshine 811 procedures per, Section D.33 and as required by the "Underground Facility Damage & Prevention Act" - Florida Statute Chapter 556. No excavation, including drilling, exploratory work, fence posts, etc., shall be permitted until the drawings of existing lines are reviewed in the field by the, Contractor and subcontractors, A/E, University trade-specific representatives, and the Owner's representatives. Any damage to utility lines during construction shall be repaired immediately by the Contractor, in a manner acceptable to the Owner and the appropriate utility company, at no cost to the Owner.

4. The Contractor shall provide, at the Contractor's expense, all heating and cooling necessary to protect the Work from dampness and cold, and to dry out the building, especially prior to millwork, doors, paint, and acoustical tile installation. A plan detailing how the permanent HVAC systems will be used during construction shall be provided for review by the Owner.
5. Temporary tie-ins to the University sewage system are prohibited. The Contractor shall provide and maintain, in a neat and sanitary condition, such accommodations for the use of the Contractor's employees as may be necessary to comply with the regulations of the State Board of Health, and the county and municipality where the project is located. Emptying chemical toilets in the University sewage system is prohibited. Pit toilets are prohibited.
6. Plans for reviewing lines running through University property must be clearly identified in the Contract Documents and must be approved by the Owner.
7. If connections to University utilities are required and permitted, the specifications must contain instructions to the Contractor to make requests for utilities service through the Owner. The Contractor must make all necessary arrangements for the service, including the point of tie-in, with Facilities Operations (through the Owner). The Architect/Engineer must obtain drawings of existing utilities and must consult University personnel regarding services available and points of connections to services. All services must be metered through meters furnished by the Contractor, and the Owner must be reimbursed for utilities. The Contractor must establish an account with the University Operations Business Office prior to any utility connection. Costs for providing temporary services must be borne by the Contractor. The specifications must clearly identify the Contractor's responsibility for the installation of service lines and payment for services, whether services are furnished by the utility company or by the University. Billing for utilities will be made by the University in accordance with the current Rate Schedule of the University. Advance arrangements must be made with Facilities Operations through the Owner before Contractor begins Work at the site. The Contractor must pay for water, chilled water, fuel for heat, electric power, and any other utility consumed until Substantial Completion has been accepted. The Contractor must install water supply lines and make changes in accordance with the FDEP permit. The Contractor must install and maintain HVAC and electrical systems. The specifications must clearly identify the Contractor's responsibility for providing continuous utility services until date of Substantial Completion, including operation of permanent equipment and services. 8.
8. Potable and reclaimed water that is necessary for construction must be obtained from the department of Facilities Operations, through the Owner. The connection point must be verified by Facilities Operations. The line size must be adequate for all demands. The A/E must specify that the Contractor make necessary connections and install a meter and backflow preventer, and that the Contractor be responsible for installation of all pipe from the meter, and removal of temporary lines upon job completion. All costs, including use and connection fees, must be paid by the Contractor at current rates.
9. The specifications shall call for temporary and permanent fire protection facilities, including fire hydrants. Prior to building construction, fire hydrants shall be installed within the specified distance of a building, according to the occupancy classification, to meet the FFPC requirements.
10. The Contractor is responsible for damages to elevators used during construction. The warranty period will begin at Substantial Completion. Any new elevators or elevator components shall be included in the A/E specifications.

Refer to Section D.33 for additional information on temporary facilities.

Field Offices and Sheds

1. The Contractor shall provide and maintain at the site suitable for use by the Contractor and Subcontractors a clean, weather-tight office. The Contractor is responsible for all expenses, including the installation cost, Internet, telephone, heat, light, water, and janitor service, unless approved in writing by the UCF Project Manager.
2. All field offices shall be conditioned, heated, lighted, and secured by doors with locks.
3. The Contractor or an authorized agent shall be present on site at all times while the work is in progress.

Vehicular Access and Parking

1. Reference to UCF traffic and parking rules shall be included in all bid documents.
2. **CN1-10: Fire lanes must be provided to all structures.**
3. Temporary vehicular access, including access roads, haul routes, and parking for the Contractor, shall be included.
4. **CN1-11: Prior to the start of construction, a plan of the existing on-campus streets and roadways that will be used shall be submitted to the UCF Project Manager.** The maintenance of traffic flow shall follow all aspects of FDOT MOT Guidelines.
5. Damage to roads or other facilities resulting from the Contractor's hauling, storage of materials, or other activities in connection with the work, shall be repaired or replaced, at no expense to the Owner. Repairs or replacements shall be made to the Owner's satisfaction. Clean-up of areas shall occur on a daily basis. The Contractor shall not overload vehicles with material, thereby causing spillage or possible damage.
6. Parking on campus is subject to regulations established by the University Parking and Transportation Services at the particular campus. Temporary fencing for parking and storage areas shall be specified by the A/E, with approval from Parking Services. Employees of the Contractor and Subcontractors shall secure parking permits from the University and must park cars in areas assigned to them. Parking on streets or in restricted areas is prohibited. At the beginning of the work, the Contractor shall report to the University the approximate number of parking permits that will be required for all employees, including subcontractors.
7. The University Police Department shall be notified at least seventy-two hours in advance of any anticipated work affecting traffic flow. To ensure maintenance of flow and to safeguard all parties involved in planning temporary routing, a field inspection shall be made jointly by the A/E, the UCF Project Manager, and Contractor prior to performing any work that would interrupt normal traffic patterns. Rerouting of traffic shall be planned, as to route and direction, in cooperation with the Police Department.

Temporary Barriers and Enclosures

1. The Contractor shall provide barricades, shielding, and/or warning signs, site lighting, and audible warning devices for the sight impaired to protect the public from hazards outside the required construction site fence. This includes but is not limited to: open trenches, falling objects, and physical hazards during darkness.
2. The construction fence location shall be shown on drawings and indicate the following:
   - a six-foot high fence with access gates around the project site;
   - a chain link fence with privacy screening on steel posts; and,
   - "No trespassing" signs meeting OSHA requirements.
3. In occupied buildings, the A/E shall indicate areas requiring noise and dust control and the methods of control. If details of installations are involved, they will

be specified in the applicable sections of the technical specifications. The Contractor shall be required to install barriers indicated by the A/E and shall provide other dust control barriers as required by construction.

Temporary Erosion and Sediment Control

1. **CN1-12: Fill soils kept on site during construction shall remain covered or contained at all times.**
2. The extent of removal of natural vegetation and the duration of soil exposure will be minimized.
3. **CN1-13: The Contractor shall remove mud and spillage from public and University streets on a daily basis. Failure to clean streets daily shall result in streets being cleaned by the Owner at the Contractor's expense.**

Temporary Storm Water and Pollution Control

1. Site debris and waste waters from construction activities, cement truck wash out, dumpsters, vehicle rinsing, and sanitary systems shall be prevented from entering the storm water system. All catch basins and storm drain lines in the vicinity of the site shall be protected at all times. If cleaning is done, it shall be contained, and the Contractor must remove the residue from the campus with other construction refuse.
2. For sites disturbing one or more acres of land, the Contractor shall adhere to UCF's Phase II NPDES Storm water permit. The Contractor is responsible for preparing a Storm Water Pollution Prevention Plan (SWPPP) per F.A.C. 62-300(7) (a) VI.4 for review by the UCF Storm Water Manager (the Director of Landscape and Natural Resources or designee), and submitting Notice of Intent, Notice of Termination and Environmental Resource and Dewatering Permits, when applicable.
3. For sites disturbing less than one acre of land, the A/E and Contractor shall submit an Erosion Control Plan to address prevention of loss of soil from storm water runoff and wind erosion, sedimentation of the storm water system, and air pollution from dust and particulate matter.
4. The UCF Storm Water Manager reserves the right to request alternate or additional Best Management Practices (BMP) and to perform weekly, pre-scheduled site inspections.
5. Copies of routine inspection documentation shall be provided to the UCF Project Manager on a monthly basis.
6. All interior spaces that must drain water during construction, shall be drained to the sanitary sewer system. All exterior areas that must drain water during construction must be drained, following applicable BMP, to the storm water drainage system. A temporary drainage plan shall be provided to the UCF Project Manager.

Project Identification and Signs

The site shall be adequately labeled for deliveries and emergency response. The Contractor shall submit to the UCF Project Manager for approval a shop drawing showing layout of the size, text, and location for all signage.

Execution and Closeout Requirements

1. **CN1-14: A detailed plan regarding the requirements for building systems start-up shall be provided by the Contractor. This is in addition to, and separate from, full commissioning.**
2. Refer to Section B for additional contract closeout requirements.
3. The A/E shall review the General Conditions regarding final cleaning to determine whether or not this subject is adequately covered; some amplification may be required.

Project Record and As-Built Documents

1. The Contractor shall maintain one set of the following records on site:

- Contract drawings
- Specifications
- Addenda
- State Fire Marshal-approved Documents
- Change Orders and Other Modifications to the Contract
- Approved Shop Drawings, Product Data, and Samples

These as-built documents shall be stored separately from documents used for construction, and will be revised with construction progresses.

2. The agreement for professional services with the A/E requires submission of record drawings reflecting "record set" conditions, which must include a copy of the Contractor's "red-lined as-built" drawings and electronic copies of the updated record documents in .rvt and .pdf formats.

3. The specifications shall be annotated to show the actual selected products that are incorporated into the project.

4. At the end of the project the A/E shall attach a set of the final structural, mechanical, and electrical calculation sheets that were prepared during design. Submitted material shall be clearly marked, "record set," and dated.

5. **CN1-15: An ACCEPTABLE record set of dated construction documents, incorporating changes during construction, must be received by the University prior to final payment to the A/E and Contractor. For all field changes made during construction, the contracted professional is responsible for the accuracy of information placed on the record documents.**

Operations and Maintenance

1. **CN1-16: It is the responsibility of the A/E to incorporate these Standards into the specifications or other contractdocuments, and to secure compliance of the Contractor with these Standards, including changes in design and specifications during construction incorporated into "record set" conditions.**

2. In the specifications, or as a preface to the manuals, the A/E shall provide a basis of design (BOD) that describes the design intent of the building systems (HVAC, electrical, fire alarm, etc.) and the principles of their operation in a manner to permit prompt, initial understanding of the systems by qualified University maintenance personnel. These descriptions shall include flow-charts, riser diagrams, zone control layouts, and other visual aids showing the components, and their relationship to the entire system.

3. All systems require Operations and Maintenance Manuals. Manufacturer's printed installation, maintenance manuals, and operating instructions shall include the technical specifications, instructions, periodicities, and troubleshooting procedures, not sales brochures and promotional matter. Instructions shall include all modes of operation in sufficient detail to be readily understood by University maintenance personnel. The O&M manuals shall include detailed identification of the actual equipment installed as described in the manufacturers' instructions, including dimensional drawings, model, type, size, performance parameters such as curves, efficiencies, power requirements, operating ranges, etc. **CN1-17: In cases of multiple installation of identical equipment, only one manual submitted for the identical equipment is necessary, but model and serial numbers of the equipment shall be listed.** The O&M manuals must include detailed parts list showing manufacturer's parts numbers and such other identification as necessary to facilitate procurement of spare or renewal parts and owner-manufacturer communications.

4. The UCF Subcontractor Listing requires the names, addresses, telephone numbers, contact person of Subcontractors and/or Sub-subcontractors, their suppliers, manufacturers' representatives, available service facilities, and normal channels of supply.
5. **CN1-18: Manufacturers' maintenance instructions shall include schedules showing proper time intervals for all manufacturers' routine maintenance (e.g., lubrication, adjustment, calibration, or checking). The Contractor shall consolidate manufacturers' schedules with a single master schedule of required maintenance.**
6. **CN1-19: Installation of systems that are known to be obsolete or are soon to be obsolete shall not be specified.**
7. **CN1-20: An all-inclusive Warranty Matrix that clearly identifies start and end dates of the Contractor's warranty and the manufacturer's warranty shall be provided by the Contractor for all equipment. All warranties shall begin at Substantial Completion.**
8. **CN1-21: All name plate data shall include manufacturer, model number, serial number, date of installation, room number (location), and operating parameters. This data shall be provided in ODBC database format (MS Excel or Access).**
9. The Contractor shall be required to submit the A/Eapproved O&M Manuals to the UCF Project Manager, in compliance with the Substantial Completion procedure.
10. One reproducible electronic copy of each system's O&M manual shall be provided.
11. Detailed performance requirements shall be stipulated in the appropriate sections of the specifications.
12. At project inspections, the Contractor shall be prepared to demonstrate all required equipment operations and shall provide all necessary tools and diagnostic equipment. The UCF Project Manager shall be notified of the schedule for any final inspections.
13. The General Conditions of the contract for construction contain instructions and requirements of the Contractor, A/E, and Owner for acceptance of the project. The A/E is responsible for including in the specifications the obligations for the Contractor, for an orderly acceptance and turnover. Such obligations include: punch lists, "record set" plans and specifications, Operating and Maintenance Manuals, and training of University personnel. Written notification will be included for insurance purposes.
14. In addition to the standard forms required by the contract documents, the following are required. When statements applying to these requirements are provided in these guides, the statements (or paragraphs similarly worded) shall be included in the specifications.**CN1-22: A one (1)-year minimum warranty is required on all building components unless otherwise stated in division specific standards. The roof system requires a twenty-five year no dollar limit (NDL) warranty.**
15. "Attic Stock" (e.g., ceiling tile, paint, etc.) requirements shall be reviewed with the UCF Project Manager, as required.

Facility Support Space

CN1-23: Dedicated separate rooms shall be provided for each of the following building service functions: electrical, telecommunications/IT, mechanical, elevator, fire suppression, and custodial. Occasional shared spaces for limited installations of related building services may be considered where there is sufficient workspace. Approval shall be obtained from the AVP of UES PRIOR to 50% design. Considered examples include fire suppression risers in large mechanical rooms or stairwells, and existing retrofits. Any use of IT spaces must be approved separately by UCF IT. Additional required room features are located in D.8, D.9, D.11, D.21 and the UCT IT Design Standards.

- **Each room's access shall be located directly off a main corridor or common area, with no spaces in between.**

Knight Notes

Lactation and Mothers Room

Faculty Senate Resolution 20172018-1 addresses UCF's need for establishing Lactation and Mothers Rooms. The resolution's intent can be reviewed upon request for more insight. PECO or CITF projects affecting a substantial portion of a building shall incorporate these requirements.

An authority will be designated to regulate room access. The room shall be dedicated to use by lactating mothers. Additional uses such as for storage are not permitted.

- **New electrical and IT distribution rooms shall be stacked vertically and each floor provided with a dedicated room for services on that floor. Alternative IT locations shall be approved by UCF IT during design.**
- **New individual floor mechanical rooms shall be stacked vertically. Individual rooms per floor preferred. Locations shall be approved by UES during design.**
- **New mechanical and equipment rooms shall have at least 1 exterior wall. Rooms with AHU's or large equipment shall have removeable louvers or similar means shall be provided and sized for future equipment replacement, including delivery path through the building (where applicable).**
- **New mechanical rooms shall have 6'-0" out swinging double doors. Grade level shall swing out to the exterior of the building. Alternative opening arrangements shall be approved by UES during design.**

Waiting Space

Large auditoriums and areas with multiple large classrooms must be provided with sufficient waiting space. Area corridors and circulation spaces must be designed to allow for simultaneous ingress/egress and waiting occupancy. Exits must be sized for the cumulative anticipated load.

Family-Type and Unisex Restrooms

Each new construction and major renovation project shall be evaluated for single-use family type and unisex restrooms based on use and user group needs.

Kitchens and Kitchenettes

Kitchens with ranges, ovens, stovetops, fryers, and similar cooking equipment shall be avoided, except for designated residential kitchens or commercial cooking operations. All cooking operations shall be protected by suppression as required by code, including residential hoods in business areas. Cooking, suppression, and exhaust equipment shall be the responsibility of the owning department to fund and or maintain. Adequate service access and work platforms shall be provide at and or to all equipment. See D.11 & D.23 for additional exhaust requirements.

Centralized breakroom space and similar food warming areas, herein referred to as kitchenettes, shall be designed for the occupant load served and contain warming only microwave type equipment. Proximate hand wash sinks shall be provided at all dedicated kitchenette areas with seating or as requested by the Owner. Kitchenette areas and equipment shall be provided with ADA accessibility. Kitchenette equipment shall be the responsibility of the owning department to fund and or maintain. See D.11 & D.23 for additional exhaust requirements.

Lactation and Mothers Room

Every non-residential facility subject to occupancy by more than 49 persons shall be provided with a private place for lactation activities. Each space shall be approximately 50 square feet and include the following features:

1. Located off a common main circulation area that is available to all building occupants and visitors.
2. Conditioned for occupancy similar to an office.
3. Designed for full ADA accessibility including turning space and access at all installed elements and around required furnishings.
4. Enclosed and secured for privacy with an occupied indicator at the entry. Door to be normally secured.
5. Sound-attenuation, door closer, and door seals.

6. Non-absorbent flooring and light-colored nonwhite walls.
7. Plumbed sink and counter surface in new construction. Renovations with plumbing readily available to provide sink, where not available to provide a counter surface with paper towel and sanitizer dispenser.
8. Comfortable, washable individual seating (no couches), and a table worksurface.
9. Power located just above all worksurface elevations and adjustable lighting (minimum 2 levels).
10. Room identification signage as Lactation Room (expressing milk) or Mothers' Room (breastfeeding) as appropriate, along with information for entry access.

Commissioning

The Department of Utilities and Engineering Services (UES) oversees both the building and system commissioning processes. Both scope and commissioning activities shall be determined on a case-by-case basis and provided in the Owner Project Requirements (OPR) document. The process shall be administered following the latest version of ASHRAE Standard 202. During new construction, the commissioning or certification of the building systems shall be completed prior to Final Completion.

Attic Stock

The A/E will specify industry standard quantities of attic stock for all appropriate equipment and products. The A/E will provide a summary spreadsheet of this list to the UCF Project Manager to verify that specified quantities are acceptable. Paint, caulk, tape, adhesives, and similar products with limited shelf life shall not be included in attic stock unless specifically requested. Surplus or partially used containers of these materials shall not be left on site. See Division 9 for additional paint turnover information.

2

Division 2 - Existing Conditions

This section includes:

Introduction

Survey Requirements

Hazardous Material Assessment

Landscape Assessment

Subsurface Investigation

Geotechnical Investigations

Introduction

The surveying and documenting of existing conditions is critical in successful project planning. Planners, Architects, Engineers, and Contractors need accurate identification of surface and subsurface features and objects within proposed project limits. The survey is the basis of information supporting all project documentation, including, CAD and/or BIM drawings.

In conjunction with projects undertaken by UCF, there are varying amounts of prior information available; however, as in any construction project, care shall be taken to verify existing conditions.

Survey Requirements

1. For topographic, utility, and boundary surveys, the following procedures shall be followed:
   - A complete survey shall be performed for each building/ project site by a registered land surveyor who is duly licensed in the State of Florida.
   - Surveyors shall have Errors and Omission Insurance at the level specified by UCF.
   - The vertical datum shall be NAVD (North American Vertical Datum) of 1988. The use of assumed elevations for benchmarks is prohibited.
   - The horizontal datum shall be referenced to the Florida State Plane Coordinate System. The use of local or assumed coordinate systems is prohibited.
   - The survey shall indicate the limits of any flood zone located within the project area, as well as reference map number, to show the limits of each flood zone as it affects the FEMA Flood Insurance Rate Map (FIRM) number.
   - For the main campus, the survey shall note the boundaries of UCF Protected Lands Document.
   - Surface features/objects shall be 3D AutoCAD Civil 2010 or later, and all subsurface pressurized systems shall be in AutoCAD MEP 2010 or later. All underground utilities and structures shall be 3D objects in a separate file that is XREF into the survey file. Survey information shall be separated using the layer system included in the United States National CAD Standards.
   - CAD data shall be in Engineering units (decimal feet), and CAD files shall include all external reference files. AutoCAD drawing files shall be produced at a scale of 1:1 in model space, i.e., drawing measurements between two objects to be equal to the actual physical distance measured in the field in decimal feet. All symbols, lettering, fonts, shapes, and blocks shall be saved with each drawing.
2. The scope of work for surveys shall include: property lines, topography, buildings, roads, sidewalks, subsurface, and above- and below-ground utilities, including the closest point of utility system tie-in if not on site, easements, significant vegetation, and any zoning or covenant requirements, such as setbacks, etc. See the UCF Survey Scope of Work document for additional requirements. A preliminary copy of any survey shall be reviewed with the UCF Project Manager before final issue.
3. Prior to the start of construction, all existing utilities shall be field verified and shown on 100% construction documents.

Hazardous Material Assessment

1. If any hazardous material, such as asbestos, will be disturbed during renovation activities, abatement of such materials shall be coordinated with Environmental Health and Safety (EH&S).
2. All electrical transformers, switches, ballasts, or other electrical equipment that contains polychlorinated biphenyls (PCB), or other equipment which has come in contact with PCB, shall be properly disposed of in coordination with EH&S.

3. **CN2-1: All Contractors shall attend a one-hour annual session covering UCF Environmental Management System construction-specific components. Contractors shall certify that provided information has been transmitted to all affected employees and subcontractors.**
4. The Contractor shall review the Environmental Health and Safety Checklist and ensure that the construction site under their control is fully compliant.
5. Less toxic alternatives shall be used wherever possible. A complete list of hazardous substances to be used on the project shall be submitted prior to the substance's arrival on UCF property, using the Contractor Hazardous Material/ Waste Inventory form. Material Safety Data Sheets shall be made available when requested.
6. All containers of hazardous substances and waste, including new and used petroleum products, shall be stored in a covered area on an impervious surface. Outside storage shall be in rain-tight, secondary containment. Hazardous substance or waste storage shall be secured.
7. Hazardous substances used in occupied spaces shall require the Contractor to prepare and follow a ventilation plan. The plan shall be submitted to a UCF EH&S representative for approval prior to use of the substance.
8. UCF is registered as a Large Quantity Generator (LQG) of hazardous waste. All hazardous waste generated shall be handled per the UCF Management System. In general, 40 CFR, parts 261 through 270, and FAC 62, parts 730 and 731 shall be followed.
9. A UCF representative shall verify that all hazardous waste is properly managed prior to its transportation off campus. The UCF EPA ID number shall be used on all manifests. Transportation and disposal facilities shall be pre-approved by a UCF EH&S representative. Alternatively, approved waste may be disposed through the University hazardous waste program at a charge to the project.
10. All spills shall be cleaned up immediately. Discharges to pervious surfaces, sanitary or storm water conveyances, or bodies of water shall be reported to a UCF EH&S representative.
11. Any hazardous or toxic material, such as asbestos or PCB, that is discovered during the course of a project, shall be reported immediately to the UCF Project Manager. All work involving suspected asbestos, or hazardous or toxic materials, shall halt immediately and must not resume until the notice to resume work has been issued by the Project Manager.

Landscaping Assessment

1. Every reasonable effort must be made to preserve any natural vegetation existing on a site.
2. If a specialty palm is to be impacted all efforts must be made to relocate the palm instead of removal.
3. Trees to be removed and to remain must be reflected on the Site Demolition Plan.
4. A separate Tree Protection Plan must be included with the civil drawings for all projects. This plan must include:
   a. A tree survey or map reflecting all trees on the site, labels for size and species must be shown.
   b. All trees to be removed and to remain clearly delineated graphically.
   c. A table listing the trees to be removed, including size, species, and the associated points per Table 2-1.
   d. UCF Tree Protection Barrier Detail (see Figure 2-1).
   e. Limit of work line that matches demolition plan limit of work line.
5. Any area impacted by construction or renovation must be

restored per Landscape and Natural Resources' direction.

6. All existing trees to remain shall be protected by a wood barrier per the tree protection barrier detail Figure 2-1. This barrier shall be erected before any site work or construction begins.
7. Trees designated to remain that are subsequently removed or damaged beyond repair during construction shall be replaced at twice the point value listed in the Tree Replacement Requirements Table 2-1. The cost of this replacement will be by the contractor, not the owner.
8. The point total of trees proposed for replacement must be equal to or greater than the point total of trees removed. If points cannot be matched on-site then the remainder of the points shall be made up off-site per Landscape and Natural Resources' direction.
9. Specimen and historic trees shall be defined as follows:
    a. Specimen Trees - Tree Type I and II with a DBH of 24" to 36"
    b. Historic Trees - Tree Type I and II with a DBH greater than 36"
10. Dead, dying, or diseased trees will be mitigated on a case by case basis. Determination of health shall be determined by UCF LNR certified arborist.

Subsurface Investigation

1. The Contractor shall inspect work areas prior to commencement of construction activity. In addition to inspections for existing damage, the Contractor shall evaluate possible interruptions to ongoing operations resulting from noise or vibration as a result of construction activities. The items shall be reviewed with the UCF Project Manager prior to commencement of construction activities.
2. Refer to Section D.1 and 811 Policy for additional information.

Geotechnical Investigations

The A/E shall provide plans showing required test boring locations and report to the UCF Project Manager. Boring locations and sections through borings shall show all soil conditions.

Table 2-1

Tree Replacement Requirement

Tree Type	Size removed	Point Required per inch or palm
Tree Type I - Large Canopy (e.g. Oak, Maple, Magnolia)	1 inch	7 points
Specimen Tree Type I - Large Canopy (e.g. Oak, Maple, Magnolia)	1 inch	10 points
Historic Tree Type I - Large Canopy (e.g. Oak, Maple, Magnolia)	1 inch	14 points
Tree Type II - Tall & Narrow (e.g. Cypress, Cedar, Sweetgum)	1 inch	4 points
Specimen Tree Type II - Tall & Narrow (e.g. Cypress, Cedar, Sweetgum)	1 inch	10 points
Historic Tree Type II - Tall & Narrow (e.g. Cypress, Cedar, Sweetgum)	1 inch	14 points
Tree Type III - Understory (e.g. Crapemyrtle, Ligustrum, Tabebuia)	1 inch	2 points
Standard Pine Tree (e.g. Loblolly, Slash)	1 inch	2 point
Specialty Pine tree (e.g. Longleaf)	1 inch	7 points
Standard Palm (e.g. Sabal Palm, Chinese Fan Palm)	1 palm	10 points
Specialty Palm (e.g. Sylvester, Medjool)	1 palm	40 points

References:

U.S. Geological Survey, National Geodetic Survey Vertical Datum of 1988 (NAVD 88) http://www.ngs.noaa. gov

National Institute of Building Sciences United States National CAD Standard version http://www.nationalcadstandard.org/ncs6

Contractor Hazardous Material/Waste Inventory form https://ehs.ucf.edu/forms/

Figure 2-1

(This detail can be found on the Landscape and Natural Resources website www.green.ucf.edu)

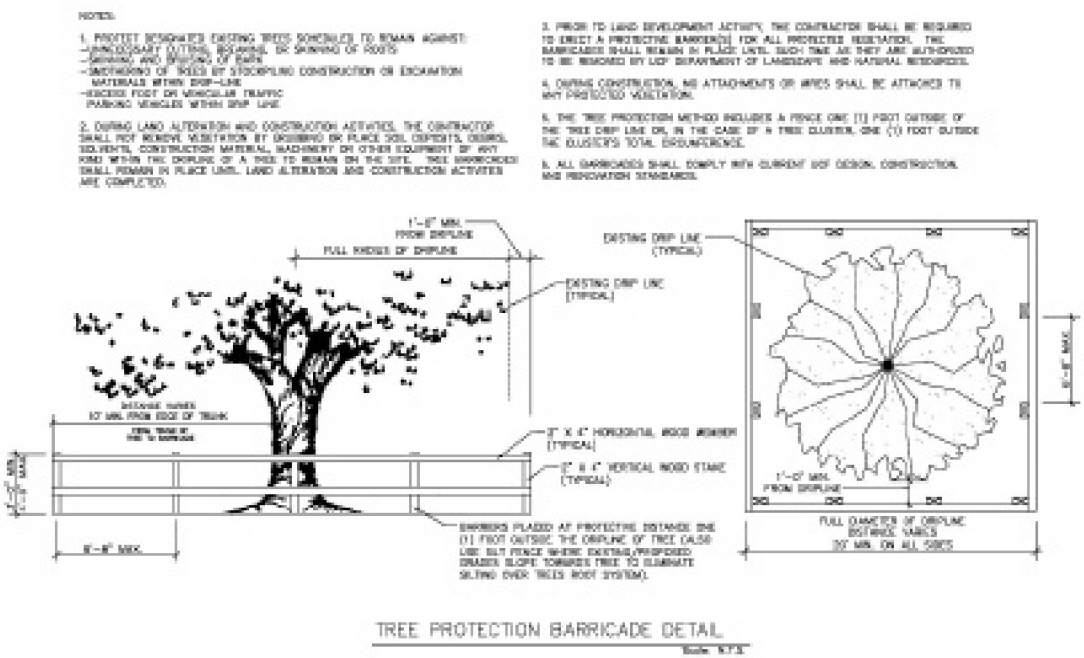

3
Division 3 - Concrete

This section includes:

Introduction

Concrete Joints, Accessories, and Anchoring

Concrete Reinforcing

Cast-in-Place Concrete

Concrete Finishing

Precast Concrete

Concrete Cutting and Boring

Introduction

This section contains the requirements for the use of cast-in-place concrete and cast-in-place architectural concrete. Concrete components include reinforcement, formwork, concrete materials, mixture design, placement procedures, and exposed concrete finishes.

~~**Section I - General Standards**~~

These Standards apply to all projects. Additional Level Specific Standards for individual project levels are indicated where applicable ~~listed in SECTION II - LEVEL SPECIFIC STANDARDS~~.

All concrete must conform to the current American Concrete Institute (ACI) standards.

Concrete Joints, Accessories, and Anchoring

1. Joint filler strips shall comply with ASTM D 1751 for asphalt-saturated cellulosic fiber or ASTM D 1752 for cork.
2. Control joints shall be straight and continuous, never staggered. To avoid uncontrolled cracks, do not extend reinforcement through control joints. Place joint locations under walls or carpeted areas whenever possible. Control joints (grooved or sawed) shall be at depth equal to at least 25% of concrete thickness. Plan the joint pattern to avoid re-entrant corners or triangular wedges of concrete which are highly prone to cracking.
3. Install joints at locations indicated or approved by the Architect so that strength and appearance of concrete are not impaired.
4. Isolation joints: After removing formwork, install joint filler strips at slab junctions with vertical surfaces.
5. For proper seals with sleeves where pipes pass through walls and floors, if expansion space is needed, use proper filler.

Concrete Reinforcing

1. Designer selected concrete reinforcing shall comply with the following ASTM standards:
   a. Reinforcing bars: ASTM A 615, Grade 60, deformed.
   b. Galvanized reinforcing bars: ASTM A 767, zinc coated after fabrication and bending.
   c. Epoxy-coated reinforcing bars: ASTM A 775, epoxy coated, with less than 2 percent damaged coating in each 12-inch bar length.
   d. Plain-steel welded wire reinforcement: ASTM A 185, plain, fabricated from as-drawn steel wire into flat sheets.
   e. Deformed-steel welded wire reinforcement: ASTM A 497, flat sheet.
   f. Galvanized-steel welded wire reinforcement: ASTM A 185, plain, fabricated from galvanized steel wire into flat sheets.
   g. Epoxy-coated welded wire reinforcement: ASTM A 884/A 884M, Class A coated, Type 1, deformed steel.
2. The reinforcing system shall include: bar supports, bolsters, chairs, spacers, and other devices for spacing, supporting, and fastening reinforcing bars and welded wire reinforcement in place.

Cast-in-Place Concrete

1. Cast-in-place concrete work shall comply with the following ACI standards, unless modified by the Contract Documents:
   a. ACI 117, Standard Tolerances for Concrete Construction and Materials.
   b. ACI 301, Specifications for Structural Concrete for Buildings.
   c. ACI 315, Manual of Standard Practice for Detailing Reinforced Concrete Structures.

d. ACI 318-08, Building Code Requirements for Structural Concrete.

2. ~~All concrete will shrink to some degree after it is placed. The extent of that shrinkage is controlled by good mixes.~~ The Contractor shall:

   a. Prepare and submit design mixtures for each type and strength of concrete, according to ACI 301.

   b. Submit shop drawings for steel reinforcement~~;~~and~~;~~ material test reports~~, and formwork, where applicable~~.

   c. Submit formwork and/or falsework shop drawings for vertical and overhead concrete, designed by an engineer registered in Florida. Submit formwork samples for appearance sensitive installations.

   d. Provide ready-mixed concrete: measure, batch, mix, and deliver the concrete according to ASTM C 94, and furnish batch ticket information.

   e. The engineer shall specify a maximum water/cement ratio. The addition of water after initial mixing is prohibited unless specifically included in the approved design mix. Plasticizer additives, where indicated in the mix design, may be used if increased slump is needed.

3. To ensure consistent quality of concrete, the material/mix used shall comply with the following ASTM standards, according to type:

   a. Portland cement: ASTM C 150, Type I/II, supplement with fly ash, Class F.

   b. Normal-weight aggregates: ASTM C 33.

   c. Lightweight aggregate: ASTM C 330.

   d. Water: ASTM C 94.

   e. Air-entraining admixture: ASTM C 260.

   f. Chemical admixtures: Admixtures certified by the manufacturer to be compatible with other admixtures.

   g. Synthetic fiber: Mono-filament or fibrillated polypropylene fibers engineered and designed for use in concrete pavement, complying with ASTM C 1116, Type III.

Concrete Finishing

1. Comply with ACI 302.1R, Guide for Concrete Floor and Slab Construction, for screeding, straightening, and finishing operations. Do not wet concrete surfaces.

   a. Plyform shall be used on all formwork for exposed vertical surfaces. Bush hammer finish is prohibited.

   b. All snaptie cone holes shall be filled and finished smooth with adjacent surfaces.

   c. All ramps, steps, landings, and exterior walks shall have an integral non-slip finish.

   d. All exposed concrete for structures shall have a rubbed smooth surface.

2. In general, exposed concrete is considered a structural material and is to be finished with a surface coating. Exposed concrete used as an interior finish material shall be formed and finished to tolerances and finish requirements that are appropriate for the occupied space. Exposed concrete as an interior finish shall be allowed in service rooms and loading areas. Other areas may be considered if approved by the UCF Planning, Design and Construction director.

3. Horizontal finish tolerances shall be specified using F-numbers (floor flatness (Ff) and floor levelness (Fl)), as defined by ACI 117 and ASTM E-1155. The designer of record shall verify the acceptable level of finish with the UCF PM and specify the appropriate standards required, if any, considering the propsed use of the slab and with the final floor finish. Flatness standards shall apply unless specifically waived by the UCF PM. See Division 9 for additional finish information.

Precast Concrete

1. Use of hollow core slabs for floor/ceiling construction is prohibited.

LEVEL D - HOUSING

Use of hollow core slabs for floor/ceiling construction in residential facilities is permitted.

2. The designer of record shall provide the following minimum details in the contract documents for architectural precast panels:

   a. Tolerances and finish requirements ~~for architectural precast concrete panels shall be indicated in the contract documents~~.

   b. Panel joints and aesthetic joints shall be indicated, detailed, and dimensioned. ~~in the contract documents~~.

   c. All edges of precast concrete shall be chamfered. Chamfer size will be at the discretion of the designer of record, but 3/4" is preferred.

   d. Outside corner joints shall be butted where at all possible. Mitering is not preferred. Outside corner joints that are mitered shall have chamfered edges on the exterior. ~~need to be accompanied provided with a quirk joint to prevent the 45 degree cut from breaking or chipping~~.

   e. Architectural precast concrete colors shall be approved by the University Architect ~~UCF Associate Vice President of Administration & Finance (Facilities & Business Operations)~~.

3. Joints and snap tie holes shall be indicated and dimensioned in the contract documents for exposed, poured-in-place concrete.

4. Exposed concrete traffic surfaces shall have a slip-resistant broom finish. Exposed concrete at stairs should have chamfered edges no greater than 1/2". Batch colored concrete may not be used on exterior slabs.

5. **CN3-1: Unpainted, precast concrete shall be coated with a siloxane water repellent to reduce surface absorbency.**

6. All concrete stairs shall be precast, metal pan, or cast-in-place construction. Exterior stairs shall be designed with non-slip finish suitable for all weather conditions.

7. The use of pavers on steps and stairs is prohibited.

8. All stair finishes shall incorporate an integral contrasting nosing finish to clearly distinguish between steps in descent under all lighting conditions. Interior stair treads shall have a nosing with an abrasive, non-slip surface.

9. All steps constructed for general-purpose use shall be designed in compliance with Life Safety Codes. Ship ladders or other similar fire escape-type stairs shall only be considered for restricted access applications. At locations where equipment or materials will be carried, standard stairs or service elevators shall be used to accommodate movement of equipment by the staff.

Concrete Cutting and Boring

1. Prior to saw cutting or core drilling existing concrete, the area shall be inspected and certified to confirm clearance of any embedded electrical wiring, reinforcing, plumbing, or all other utilities.

2. Concrete reinforcing or structural steel shall not be cut or cored without written permission from the engineer of record.

3. For interior spaces, a containment plan for dust and debris including protection of HVAC systems shall be provided for approval by the UCF PM prior to debris generating work. The contractor shall be responsible for cleaning and or replacement of contaminated surfaces, ductwork, and filters associated with the concrete work.

References:

Various Standards, American Concrete Institute (ACI), http://www.concrete.org

ASTM International, *http://www.astm.org*

Section II - Level-specific Standards

LEVEL A - LABORATORIES

Precast Concrete

Use of core slabs for floor/ceiling construction is prohibited.

LEVEL B - CLASSROOMS, OFFICES, CONFERENCE ROOMS, AND OTHER ACADEMIC SPACES

Precast Concrete

Use of core slabs for floor/ceiling construction is prohibited.

LEVEL C - RENOVATIONS

Precast Concrete

Use of core slabs for floor/ceiling construction is prohibited.

LEVEL D - HOUSING

Precast Concrete

Core slabs may be used for residential floor/ceiling construction.

LEVEL E - LEASED PROPERTY (FIVE YEAR LEASES OR LESS)

Precast Concrete

Use of core slabs for floor/ceiling construction is prohibited.

4

Division 4 - Masonry

This section includes:

General Standards

Building Exterior

Mortar

Masonry Accessories

Commissioning of Masonry

Unit Masonry

Brick Masonry

Concrete Unit Masonry

Glass Unit Masonry

Masonry Restoration and Cleaning

Cast Stone

~~Introduction~~ General Standards

This section contains the requirements for manufactured units of masonry and cast stone, including masonry cleaning.

~~Section I - General Standards~~

These standards apply to all projects. Additional Level Specific Standards for individual project levels are indicated where applicable ~~are listed in SECTION II - LEVEL SPECIFIC STANDARDS~~.

Building Exterior

Selections for all visible exterior building elements shall be provided in early schematic stages for owner review and approval. Facilities within the Gemini Boulevard boundary shall be designed with a combination of brick, cast stone, metal panel, and curtain wall. Renderings shall be provided for approval by the University Architect prior to the completion of the construction documents.

Mortar

1. Mortar shall be specified based on performance criteria. For building additions, the color shall match existing. All other mortar shall be gray in color unless a deviation is approved in writing. **CN4-1: Tinted or colored mortar is prohibited except on walls with all cast stone.** When using tinted concrete on cast stone walls, the mortar shall match the stone color. Plasticizers, accelerators, retardants, water repellent agents, or other admixtures are not to be used for mortar. Mortar shall be tested per ASTM C780 and C109.
2. Mortar joints shall be tooled slightly concave. Struck or raked joints shall not be used in exterior walls.

Masonry Accessories

1. Brick ties, plates, fasteners, lintel angles, relieving angles, and other metal accessories shall be galvanized steel (minimum G- 90) or stainless steel.
2. Flashing shall extend beyond openings and have end dams at vertical terminations. Through-wall flashing for brick veneer shall extend within the wythe a minimum of 12 inches above the weep location. Coordinate and detail the interface between below-grade waterproofing and through-wall flashing, as well as base flashing and weep vents. For brick masonry veneer above roof areas, through-wall flashing shall be fabricated from copper or stainless steel sheet metal and shall have receivers for roof counterflashing.
3. Cavity walls shall be specified, detailed, and constructed so that cavities drain freely without being obstructed with mortar accumulations in the cavity. Brick ties shall be specified with built-in drips to prevent water from bridging the cavity. **CN4-2: Brick cavity walls shall have a 2" minimum air gap between the back of the brick and the next wall/ insulation surface in the wall assembly.** Mortar in the brick cavity must never bridge between the back of the brick and the face of the backup wall or insulation.
4. Weeps shall be installed at all through-wall flashing locations, in accordance with the Brick Industry Association (BIA) guidelines. Open head and sill joints with honeycomb plastic weep inserts are required, rather than cords or tubes. Locate through-wall flashing and weeps a minimum of twelve (12) inches above adjacent roofs, to allow reroofing without interfering with their operation.
5. If water repellent systems are used, provide breathable systems rather than barrier systems.

Commissioning of Masonry

1. The University will include building commissioning as part of the project requirements. For certain projects, the building commissioning will include the building envelope, which includes exterior masonry cladding systems. The project specifications shall provide information to outline the building envelope commissioning requirements.

2. The Architect will coordinate a building envelope pre-construction conference for all new construction and exterior wall renovation projects. Participants will include the UCF Project Manager, facilities manager responsible for maintaining the facility, Architect/Engineer, Contractor, masonry installation Contractor, and representatives from other related trades.
3. A mock-up shall be prepared for review and approval. Mock-ups shall be erected in minimum four (4) feet by four (4) feet panels, including specified mortar, accessories, window glazing, and flashing assemblies. Mock-ups shall include the interfaces of building envelope systems. When accepted, the mock-up will demonstrate minimum standards for the work. Color and blend of face brick shall generally match brick work in adjacent buildings. The specifications prepared by the Architects shall call out the erection of the mock-up panel. The panel shall not be removed until the masonry work is completed or until removal is authorized.

Unit Masonry

Design and layout of all masonry construction shall be based on the module of the unit selected, including brick, concrete masonry units (CMU), and cast stone. The design shall be dimensioned accordingly, and modular in both horizontal and vertical directions, including masonry rough openings, in order to minimize cutting and material waste. Documents representing masonry in a graphic hatch without considering masonry modules and units are prohibited. All masonry expansion joints, window, door, and glass openings shall maintain and consider masonry module dimensioning.

Brick Masonry

1. Brick shall comply with ASTM C216 and C652, type FBS, grade SW.
2. All brick surfaces shall be provided and maintained in their original natural, unpainted condition. Painting or otherwise altering the appearance of any exposed brick masonry is strictly prohibited.
3. All face brick shall be standard size (8" long x 2 ½" high x 3 5/8" wide), with net cross-sectional area not less than 75% of the gross area in the same plane, and with core holes not less than ¾" from any edge.
4. Brickwork shall be placed in a running bond pattern. Stack bond is prohibited.
5. New brickwork adjacent to existing brickwork shall be selected and coursed to match the existing brickwork.
6. Building additions and renovations shall match existing brick when available. Soldier and rowlock coursing at heads and sills of windows and at floor levels of the building are acceptable.
7. Custom, special-shaped brick units for outside corners, window sill, window heads (accommodating steel lintels), string courses, and various angle units are acceptable. Custom, special-shaped brick units for field areas of exterior walls are prohibited.
8. All new brickwork, including but not limited to expansion joints, ties and fasteners, and accessories, shall comply with the guidelines established by the Brick Industry Association (BIA).
9. Expansion joints and control joints shall be detailed and specified by the Architect on construction documents per BIA standards, to accommodate potential movement that may cause cracking.
10. Sealant joints shall have backer rods, and the sealant color shall match adjacent mortar joints to the extent possible. For exposed joints that do not receive a coating, silicone-based sealant joint materials are required. The maximum sealant joint is 3/4", unless recommended and warranted specifically by the product manufacturerap-proved installer and Contractor. *See also Division 07.*
11. All brick samples shall be approved by the University Architect ~~UCF Vice President of Administration and Finance and the Associate Vice President of Administration & Finance (Facilities & Business Operations)~~ prior to the completion of the construction documents and bidding.
12. Brick veneer and color of precast panels shall be specified by manufacturer.

Concrete Unit Masonry

1. Concrete Masonry Unit (CMU) construction shall comply with guidelines established by the National Concrete Masonry Association (NCMA).
2. The Architect will specify mortar type "N" for above grade masonry; specify type "S" for below-grade and other structural applications.
3. Expansion joints and control joints shall be detailed and specified, to accommodate potential movement that may cause cracking.
4. Hollow cells shall be reinforced and grouted per structural requirements. Test grout per ASTM C 1019.
5. Rub out all casting irregularities before any finish treatment is applied.
6. All full-height masonry walls, exterior and interior, shall be built tightly against the floor or deck construction above.
7. **CN4-3: New CMU shall be placed in a running bond pattern. Stack bond in load-bearing walls is prohibited.**
8. The depth of the foundation and CMU walls below grade shall be 16 inches minimum. Fully grout all CMU below the finished grade.
9. Split-face and ground-face block is prohibited.

Glass Unit Masonry

CN4-4: Glass unit masonry may not be used.

Masonry Restoration and Cleaning

Special care shall be used for restoration and cleaning of existing brick wall surfaces. **CN4-5: Do not sand blast or acid wash brick surfaces.** Before chemical cleaners or other methods are used, test a sample area in an inconspicuous area to verify that the method will not damage the brick masonry surfaces.

Cast Stone

1. The use of cast stone *(Division 0 4 Masonry Product)* or Architectural precast *(Division 03 Concrete Product)* in place of natural cut stone as decorative pieces to accentuate the buildings on campus is permitted. Window sills, headers, string courses, lintels, column caps, wall coping, and other accent details may be cast stone or Architectural precast.
2. Cast stone may be dry cast (zero-slump concrete) or wet cast, as recommended by the Architect.
3. The specifications shall require the manufacturer to be a (ASTM C1364 compliant) producing member of the Cast Stone Institute (CSI) and/or an Architectural Pre-cast Association (APA)- certified plant with at least five years manufacturing experience. Installers shall be required to provide owner, Architect, and Contractor references on past projects.
4. For any product, detailed shop drawings shall indicate structural attachments, flashing, dimensions, and other pertinent information.
5. In addition to tests for compressive strength, absorption, and others as required by the CSI, the APA, or the American Concrete Institute (ACA), the specifications for cast stone or architectural precast shall require testing at the manufacturer's plant for chloride ions in the stone/ precast and mortar, per ASTM C1218 (water-soluble chloride) and/or ASTM C1152 (acid-soluble chloride). The maximum allowable chloride content, which varies depending on the exposure of the stone or precast, is established by ACI 318. All tests shall be performed on one sample per every 500 cubic feet of material (stone or precast).
6. Provide full width through-wall flashing with end dams.
7. Rake back joints and install backer rod and sealant.
8. **CN4-6: Cast stone shall be coated with a siloxane water repellent to reduce surface absorbency.**

9. Reinforcement shall be per the applicable APA guide spec-galvanized or epoxy-coated steel where coverage is less than 1.5 inches. The Architect may also consider the use of non-corroding fiberglass reinforcement.

References:

American Concrete Institute (ACI) Building Code Requirements for Masonry Structures and Specifications for Masonry Structures

ASTM C109/C109M Standard Test Method for Compressive Strength of Hydraulic Cement Mortars (Using 2 in. or 50 mm cube specimens)

ASTM C216 Standard Specification for Facing Brick (Solid Masonry Units Made from Clay or Shale)

ASTM C270 Standard Specification for Mortar for Unit Masonry

ASTM C652 Standard Specification for Hollow Brick (Hollow Masonry Units Made From Clay or Shale)

ASTM C780 Standard Test Method for Preconstruction and Construction (Evaluation of Mortars for Plain and Reinforced Unit Masonry)

ASTM C1019 Standard Test Method for Sampling and Testing Grout

ASTM International, http://www.astm.org

Cast Stone Institute, http://www.caststone.org

The Masonry Institute (TMS)

National Concrete Masonry Association (NCMA), http://www.ncma.org

Portland Cement Association (PCA), http://www.cement.org/

Technical Notes on Brick Construction, The Brick Industry Association (BIA), http://www.bia.org

Section II - Level-specific Standards

LEVEL A - LABORATORIES

Unit Masonry

Building additions and renovations may match existing brick.

LEVEL B - CLASSROOMS, OFFICES, CONFERENCE ROOMS, AND OTHER ACADEMIC SPACES

Unit Masonry

Building additions and renovations may match existing brick.

LEVEL C - RENOVATIONS

Unit Masonry

Building additions and renovations may match existing brick.

LEVEL D - HOUSING

Unit Masonry

Housing projects that are not in the core of campus are not required to use unit masonry in their design and construction.

LEVEL E - LEASED PROPERTY (FIVE YEAR LEASES OR LESS)

Unit Masonry

Retail projects that are not in the core of campus are not required to use unit masonry in their design and construction.

THIS PAGE INTENTIONALLY LEFT BLANK

5
Division 5 - Metals

This section includes:

General Standards
Structural Metal Framing
Structural Steel
Metal Fabrications
Metal Stairs
Handrails and Railings

~~Introduction~~ General Standards

This section contains the requirements relating to structural steel, miscellaneous structural shapes, cold-formed metal framing, gratings, castings, supports for ceiling-hung equipment and framed partitions, construction inserts and fastening devices, expansion joint inserts and covers, stair nosing and access doors for both ceiling and wall applications, vertical ladders for elevator pits, welded steel ladders (to meet OSHA), elevator pit sump gratings, corner guard angles, steel angles, channels and clips, pipe sleeves for mechanical and electrical trades, trench drain gratings and frames, and galvanized steel corner guards. All metal components must conform to applicable ASTM requirements.

These Standards apply to all projects. Additional Level Specific Standards for individual project levels are indicated where applicable.

Structural Metal Framing

1. Metal stud framing shall be used for interior wall construction. The use of wood framing is not acceptable. Steel studs shall be 22-gauge or heavier. The use of 25-gauge studs is prohibited. All metal stud framing shall be spaced a maximum of 16" on center.
2. The use of structural, cold-formed, metal-framed exterior backup walls for brick veneer, when appropriate, is allowable using guidelines from the Brick Industry Association Technical Notes on Brick Construction 28B
3. All load bearing cold-formed metal framing shall be designed by the engineer of record or a delegated engineer. Load bearing is defined as any gravity or wind loaded framing. Interior partition walls shall be designed for a minimum uniform lateral load of 5 PSF.

Structural Steel

1. All structural steel work must meet AISC and ASTM standards.
2. **CN5-1: All structural and miscellaneous steel on all UCF projects must be shop primed. All primed iron and steel beams must be touched-up or corrected at the jobsite.**
3. Exceptions due to fireproofing will be considered in the design phase only using the deviation process - specific basis of design product data recommending non-primed steel must be provided as part of the deviation request. All exterior steel that will remain exposed to the elements must be galvanized.
4. Level of galvanization shall be G90 unless indicated otherwise. When specifying, consider size limits for galvanizing facilities. Specifying professional shall consider requiring Architecturally Exposed Structural Steel (AESS) in areas exposed to public view, in consultation with the UCF Project Manager.

Metal Fabrications

Galvanized steel angles shall be used in all exterior masonry, stone, or precast concrete walls, and in all interior walls where used in conjunction with stone. Level of galvanization shall be G90 unless indicated otherwise.

Metal Stairs

1. All metal stair treads shall have an integral contrasting nosing with an abrasive, non-slip surface and a heavy-duty aluminum frame.
2. All metal pan stairs with concrete-filled treads shall have an integral contrasting nosing with an abrasive, non-slip surface.
3. Ships ladders or other similar fire escape-type stairs shall only be considered for restricted access applications. In applications where equipment or materials will be carried, standard stairs are required.
4. All steps constructed for general-purpose use shall be designed in compliance with Life Safety Codes.

Knight Notes

D5-1: The design of elevated public spaces, both interior and exterior, should be mindful of the temptation of vandalism, parkour, and similar undesirable activities. Such elevated spaces should be designed with elements to discourage access for inappropriate purposes.

Knight Notes

D5-2: Continuous Handrails: *The design of stair runs at land ings requires special attention. In order to provide a continuous handrail at the midlanding, the tread nosing at the top run and bottom run cannot align with one another and need to bypass. Newel post or vertical handrail sections shall be provided in order to make the railing contin-uous.*

Handrails and Railings

1. **CN5-2: All exterior handrails and guardrails shall be brushed aluminum or stainless steel pipe. Painted exterior handrails and guardrails are prohibited.**
2. **CN5-3: Open sides of exterior elevations accessible by the public greater than 30' above grade shall be provided with physical barriers to prevent accidental or intentional falling [KN D5-1]. Where requested by the owner, such barriers shall fully cover wall openings or shall be minimum eight feet (8') and designed to be inherently climb resistant. The decorative element shall match the general aesthetic appearance of similar structures and installations already present on campus. Features such as rails, awnings, and fences shall be provided with integral durable finish as noted in previous sections, field applied coating (other than minor touch up) is not acceptable. The decorative elements shall be provided by conceptually during design and approved by the University Architect. Shop drawings and finishes shall be reviewed prior to installation. Shop drawings shall include signed and sealed drawings with supporting calculations.**
3. **CN5-4: For interior spaces, the guardrails and handrails shall be an all-aluminum or all-stainless steel system. Aluminum handrails shall be brushed aluminum. Painting is prohibited [KN D5-2].**
4. All mechanical fasteners used in the assembly of railing systems shall be manufactured from stainless steel.
5. For rail posts set in concrete, furnish matching sleeves or inserts not less than 5 inches long.
6. All exterior metal handrail and guardrail systems are properly designed to accommodate expansion/ contraction with adjacent materials.

6

Division 6 - Woods, Plastics, and Composites

This section includes:

Introduction

Rough Carpentry

Architectural Woodwork

~~Introduction~~ General Standards

This section contains the requirements relating generally to wood and plastics, including rough carpentry, prefabricated structural wood, finish carpentry, wood treatment, architectural woodwork, and plastics.

~~Section I - General Standards~~

These standards apply to all projects. Additional Level Specific Standards for individual project levels are indicated where applicable ~~listed in SECTION II - LEVEL SPECIFIC STANDARDS.~~

Rough Carpentry

1. **CN6-1: Wood materials shall not be used for any structural elements.** Arsenic-free, pressure-treated, and fire-rated material (where applicable) shall be used for all lumber in contact with concrete, masonry, or steel.
2. The use of wood above suspended ceilings is prohibited.
3. All fasterners used with pressure-treated wood shall be compatible with the wood treatment.
4. Wood may be used only in the following applications:
   - Blocking for the installation of cabinets, shelving, and wall-hung equipment.
   - Nailing strips for the installation of wood base, chair rails, and crown molding.
5. All wood blocking, nailers, and cant strips shall be pressure-treated and certified for use in roofing applications.
6. Use fire-treated, 3/4" plywood for backboards in electrical, voice, and data rooms.
7. Wood must be back-painted before setting.

Architectural Woodwork

~~The use of custom-made, built-in cabinets, desks, bookcases, and counter tops are to be avoided. Where use of built-in furniture is necessary, the design and construction shall be modular and movable. Also see Section D.12.2 for laboratory casework.~~

1. The design and construction of all millwork shall be a minimum AWI Custom Grade, in accordance with the Architectural Woodwork Institute Architectural Woodwork Standards. Custom Grade is specified for most conventional architectural woodwork. This grade provides a well-defined degree of control over the quality of workmanship, materials, and installation of a project.
2. For plastic laminate countertops, the core substrate shall be a minimum of ¾" finish grade plywood, with 1/16" general purpose grade high-pressure decorative laminate (HPL) surfacing. High-wear HPL shall be provided where appropriate. See Division 12 for additional details for countertops in research, shop, and laboratory type areas.

   ~~Limited feature areas or fine woodwork in special areas approved by the UCF Project Manager may be AWI Premium Grade. Special plastic laminate work may also be considered in similar applications when approved.~~
3. All wood-based panels shall be appropriate for the installation environment and conditions of use.The use of particleboard, fiberboard, or other similar glue based pressed panel products is prohibited in millwork and casework located in areas exposed to moisture ~~in the construction of laboratory casework, or in millwork to be located in wet use areas, is prohibited~~. See Division 12 for additional details for casework in research, shop, and laboratory type areas.
4. Drawer slides shall be side-mounted type rated for intended use, but in no case carrying less than a 100 lb. load rating. File drawer slides shall carry a minimum 150 lb. load rating. Soft closing drawers shall be provided unless alternatives are confirmed acceptable with the PDC interior design staff.
5. Cabinet hinges shall be flush overlay, concealed self-closing, all metal, 165-degree opening. Soft closing doors shall be provided unless alternatives are confirmed acceptable with the PDC interior design staff.

   ~~All finishes (plastic laminates, wood, etc.) must meet flame spread rating requirements of Florida Fire Protection Code (FFPC).~~
6. **CN6-2: Wood handrails are prohibited.**

Knight Notes

6-1: *Standard engineered panel products such as HDF,MDF,OSB, and melamine located in areas routinely exposed to water splashing, spills, and cleaning related moisture (such as wet mopping), need to be provided and installed with inherent resistance to premature water included deterioration and swelling.*

~~**References:**~~

~~*Architectural Woodwork Institute Architectural Woodwork Standards, http://www.awinet.org/content.asp?contentid=148*~~

Section II - Level-specific Standards

LEVEL A - LABORATORIES

Architectural Woodwork

In laboratories where chemicals are used, acid-resistant monolithic epoxy countertops must be used. The material must meet flame spread rating requirements of the Florida Fire Prevention Code (FPPC).

LEVEL B - CLASSROOMS, OFFICES, CONFERENCE ROOMS, AND OTHER ACADEMIC SPACES

Architectural Woodwork

Epoxy, solid surface, or plastic laminate countertops shall be used. The material must meet flame spread rating requirements of the Florida Fire Prevention Code (FPPC).

LEVEL C - RENOVATIONS

Architectural Woodwork

Epoxy, solid surface, or plastic laminate countertops shall be used. The material must meet flame spread rating requirements of the Florida Fire Prevention Code (FPPC).

LEVEL D - HOUSING

Architectural Woodwork

Epoxy, solid surface, or plastic laminate countertops shall be used. The material must meet flame spread rating requirements of the Florida Fire Prevention Code (FPPC).

LEVEL E - LEASED PROPERTY (FIVE YEAR LEASES OR LESS)

Architectural Woodwork

Epoxy, solid surface, or plastic laminate countertops shall be used. The material must meet flame spread rating requirements of the Florida Fire Prevention Code (FPPC).

THIS PAGE INTENTIONALLY LEFT BLANK

7

Division 7- Thermal and Moisture Protection

This section includes:

Introduction
Section I - General Standards
Site Drainage
Dampproofing and Waterproofing
Thermal Protection
Exterior Insulation and Finish Systems
Weather Barriers
Vapor Retarders
Steep Slope Roofing

(cont'd on Page D.7-2)

Introduction

This section addresses technical requirements for thermal and moisture protection provided by low slope and steep slope roofing systems that include insulation, roof membranes, shingles, standing seam metal, membrane flashing, and sheet metal flashing. In addition, this section contains the requirements for waterproofing, dampproofing, air barriers, insulation, and exterior insulation and finish systems.

The A/E shall coordinate the ground floor finish floor elevation with the site grading plan and flood plain level to mitigate building water intrusion and insure that water flows away from the building.

Section I - General Standards

These standards apply to all projects. Additional standards for individual project levels are listed in SECTION II - LEVEL SPECIFIC STANDARDS.

Site Drainage

CN7-1: The entire site must be graded to provide positive drainage away from the building. Finish floor elevation must be set to prohibit flooding in a 100 year storm condition.

Dampproofing and Waterproofing

1. Above- grade wall surfaces that are concealed by masonry wall panels or masonry veneer shall be dampproofed or waterproofed to resist water intrusion.
2. Exterior wall assemblies shall be waterproofed to 48 inches above finish grade, not dampproofed.
    - Walls with brick veneer constructed below-grade shall have the cavities grouted to a line approximately 12 inches above finish grade. Flashing and weep vents shall be installed directly above grouted walls. Attention should be paid to termination of below-grade waterproofing and its incorporation into the building envelope.
    - Bentonite panel waterproofing and accessory products should be used for positive side, below-grade applications such as on the sides and bottom of elevator pits.
    - Modified bituminous sheet waterproofing shall be used for above-grade applications.

Thermal Protection

Thermal insulation materials shall comply with the current Florida Building Code.

Exterior Insulation and Finish Systems

Exterior insulated and finish systems (EIFS) shall not be used except at soffit conditions.

CN7-2: The use of stucco is prohibited.

Weather Barriers

1. Air and vapor barriers shall be detailed, specified, and installed so that condensation will not occur within the wall assembly.
2. Air barrier system performance standards shall be consistent with those established by the Air Barrier Association of America (ABAA).

Vapor Retarders

Plastic vapor retarder shall meet the requirements of ASTM E 1745, Class A, B, or C. Place, protect, and repair vapor retarders according to ASTM E 1643 and the manufacturer's written instructions: polyethylene sheet, ASTM D 4397, not less than 10 mils thick.

Division 7 Contents

(cont'd from Page D.7-1)

Roofing and Siding Panels

- **Roof System Design**
- **Pre-installation Conference**
- **Warranty Requirements**

Metal Wall Panels

Membrane Roofing

Flashing and Sheet Metal

Standing Seam Sheet Metal Roofing

Roof and Wall Specialties and Accessories

Firestopping

Sealants and Caulking

Section II - Level-specific Standards

Steep Slope Roofing

Roof slopes greater than 2:12 are prohibited.

Roofing and Siding Panels

The roofing system includes the following components: roof deck or substrate, insulation, waterproofing membrane, protective surfacing, flashing and counter flashing, copings, perimeter fascias/gravel stops, roof expansion joints, walkway pads, roof drains and emergency overflow protection, scuppers, gutters, and downspouts.

ROOF SYSTEM DESIGN

1. **CN7-3: The design prepared by the A/E shall adhere to the University Operations Memorandum: Roof Systems, found on the Planning, Design and Construction website.**
2. **CN7-4: The Architect, Engineer, and Construction Manager must coordinate with the University's Building Envelope consultant.**
3. **CN7-5: The 100% construction document will include complete roofing documentation.**
4. The selection of roofing materials shall be limited to those manufacturers with a twenty (20)-year history of satisfactory manufacturing, installation, and performance.
5. **CN7-6: The 50% construction documents shall include complete roofing specifications and details.**
6. All roof conditions shall be detailed according to the recommended procedures provided in the National Roofing Contractors Association (NRCA) Roofing and Waterproofing Manual.
7. **CN7-7: Roof drainage must be tied into the underground storm water system unless a local cistern is incorporated into the project. If a cistern is used, overflow must be directed to the campus storm water system.**
8. All modified bitumen and single-ply roofs shall have light-colored surfaces complying with LEED certification requirements. **CN7-8: Hot mop applied roof products are prohibited.**
9. **CN7-9: All thermal insulation shall be installed at the roof deck. Insulation laid on suspended ceilings is not permitted.**
10. All roofs shall meet uplift requirements per ASCE7.
11. Power-driven shot fasteners are prohibited.
12. All roofs must meet 150 mph wind lift requirements with a 130 mph wind rider.
13. Roofs must include 4'-0" x 4'-0" tapered drain sumps, with a minimum 1/2" per foot slope.
14. All roofing installers shall be certified by the manufacturer of the roofing system being installed or repaired. Roof contracting firms shall have a minimum of five years' experience installing the type of system specified.
15. The roofing Contractor shall provide a specific protection plan for all new and re-roofing projects, describing the means of maintaining the building in a safe and watertight condition throughout the construction period.
16. All levels of roofs and roof mounted servicable equipment shall be made accessible by permanent means. Roof access ladders shall be secured for authorized use only and located in a restricted access area where at all possible. See the fall protection section for additional considerations.
17. Access door thresholds to the roof shall be 7" above the adjacent roof surface, with a ramp provided for equipment maintenance. An acceptable walking surface shall be installed immediately outside the access door threshold on the roof system. The access door shall be directly connected to the building stairs and be an outswing door. The door must be keyed so that regular building occupants cannot access the roof.
18. Provisions shall be made for the movement of heavy equipment. Roofs with heavy equipment shall be designed with stair access to the roof.

Roofs with light or minimal equipment may have access provided by a roof hatch. Roof hatches where permitted shall be gasketed, insulated, and provided with hold open arm, lift assistance compression spring type operators, stainless steel hinges and pins, and slam latch with exterior and interior operable handles with integral interior padlock hasps. Installed product shall include a minimum five (5) year warranty. Basis of design shall be manufactured by Bilco, or others as approved by submittal review prior to installation.

19. **CN7-10: All roofs shall have continuous walking pads from points of access to and around all equipment, shall be an integral assembly to the roof membrane, shall meet all required wind loads, shall be approved by the manufacturer, and shall be included in the roof warranty. Modified bitumen systems path shall be minimum 36" and single ply membrane systems shall be minimum 30" in width. Additional width is preferred at roof access points, landings, and equipment service areas.**
20. **CN7-11: The use of curb-mounted roof equipment is not permitted, except as follows: fume hood and hood exhaust, toilet exhaust, and smoke exhaust, or as approved by Facilities Operations during design where there is no other feasible option. Projects for re-roofing buildings that currently have roof-mounted equipment shall include removing and relocating such equipment.**
21. For acceptable rooftop equipment, provide a minimum of 12 inches high, insulated steel roof curbs. Curbs installed on roofs using roofing materials that require a cant shall have a 3 inch cant installed, in accordance with the roofing manufacturer's requirements.
22. Utility supply lines (electrical, water, gas, etc.) to roofmounted equipment shall be installed within the supporting curb of that equipment. Special application equipment, such as laboratory exhaust fans, that cannot support routing of utility lines through the fan curb shall use an approved roofing manufacturer's pipe penetration system.
23. Lightning air terminals, cables, and accessories shall not be attached to or penetrate the base flashing or roofing membrane material.
24. **CN7-12: Traditional skylights are not permitted.**
25. Roof-mounted antennas shall be approved by the Owner.
26. **CN7-13: Interior gutter systems for roof drainage are prohibited.**
27. Gutters and downspouts, hangers, straps, and shoes shall be completely detailed.
28. Pitch pockets are prohibited.
29. All new flat and low slope roofs shall be protected by a 42-inch parapet around the perimeter of the roof. An owner-approved OSHA-compliant fall protection system may be considered in limited access applications and as approved by FO and EHS. Fall protection shall be provided at hatch openings and where a ladder is placed adjacent to an unprotected building edge, including where portable ladders are needed to service roof equipment. See the fall protection section for additional considerations.
30. Re-saturates must not be used to rejuvenate an existing built-up roof system.
31. Roof-overs are not permitted.
32. Low VOC top coat sealant systems may be applied in accordance with manufacturer's specifications to existing stable membrane roofing systems. Coating shall be specified as a complete system including all top coats, base coats, primers, and associated support material by the same manufacturer. Basis of design shall be Tremco, Liquitec, or Facilities Operations equivalent submitted and approved prior to inclusion in design documents. Submittals including a minimum of product specifications, shop drawings, and proof of installer's

Knight Notes

D.7-1: *Florida Building Code Product approval requires that the roofing system be adequately tested for wind uplift design pressures as determined by the Structural Engineer for the project.*

D.7-2: *Refer to Green Roof Evaluation in Section C for the required evaluation related to Green Roofs.*

manufacturer certification shall be provided to Facilities Operations for review and approval prior to installation. Use of top coat materials must be accompanied by a roof measurement report, diagnostic survey, core samples, lift tests, and or moisture reports as required by the manufacturer to provide a minimum 15 year warranty. An authorized manufacturer's representative shall be required to be on site to monitor application in accordance with product specifications. Removal and reinstallation of lightening protection system shall be included with a licensed lightening protection contractors review for UL compliance upon completion. Please see the Pre-Installation Conference section for additional applicable criteria.

33. Coatings are not permitted on existing asphalt shingle roof system. Replacement of existing shingle systems shall be architectural shingles or standing seam metal roofing systems. Light colored finishes shall be chosen to promote energy efficiency.

PRE-INSTALLATION CONFERENCE

1. **CN7-14: All roofing details shall be reviewed and approved by the Owner, prioir to the pre-installation conference.**
2. The pre-installation conference shall convene one week prior to commencing work at project site, with 72 hours' minimum notice to participants. The conference will include the General Contractor or Construction Manager, roofing Contractor, subcontractors, the University Building Envelope consultant, the Architect, and the Owner representatives.
3. The agenda shall include contract documents, submittals, sequencing, availability of materials, the proposed installation schedule, requirements for inspections and testing or certifications, forecasted weather conditions, governing regulations, insurance requirements, worker qualifications, and proposed installation procedures. It shall also address roofing system protection requirements for the construction period extending beyond roofing installation.

WARRANTY REQUIREMENTS

1. Once the final roof membrane is installed, the Contractor must protect it against damage until final acceptance. The roof must be thoroughly cleaned prior to turnover and must be approved/accepted by the Owner.
2. A pull test must be witnessed by the Owner. Written results must be provided to the Owner prior to acceptance of the required manufacturer warranty.
3. **CN7-15: Within a period of three (3) to six (6) months after the final completion, an aerial infrared scan of the roof system must be performed by a third party vendor not affiliated with the roofing contractor and the results transmitted to the owner. The aerial scan and results report shall meet the documentation requirements of the Infraspection Institute for infrared inspection of insulated roofs.**
4. All roofing systems must have a twenty-five (25)-year no dollar limit (NDL) warranty on installation and labor issued by the roof installation Contractor, from the date of Substantial Completion. During this period, the manufacturer shall pay all costs of repairs to the roof system necessary to correct roof leaks resulting from improper workmanship in the application of the roofing system and substrate components.
5. During the warranty period, the manufacturer and the Contractor agree that, within twenty-four hours of receipt of notice from the Owner, they will inspect and make immediate emergency repairs to defects or to leaks in the roofing system. They further agree that, within a reasonable time, they shall restore the affected items to the standard of the original specifications.
6. All emergency work and permanent work done during the warranty period shall be done without cost to the Owner, except in the event it is determined that such

leaks werecaused by Owner abuse, vandalism, lightning, hurricane, tornado, hail storm or other causes typically excluded by the warranty document.

7. All warranties and guarantees shall be in written form acceptable to the Owner and shall be made by an authorized representative of the roofing system manufacturer.
8. The Contractor shall provide training to instruct University maintenance personnel in the proper care and maintenance of the roofing system.
9. The Contractor will provide a completed data sheet to facilitate the addition of the roof system information and warranty information to the Owner's Roof Asset Management database.

Metal Wall Panels

CN7-16: Metal wall panel systems shall be detailed and specified with continuous vapor barrier systems, flashing, and weeps so that water will not accumulate within the wall system. Details shall indicate fastening systems and joint details where the metal panel systems are adjacent to other wall cladding systems, such as brick masonry, curtainwall, or storefront systems. Rainscreen metal panel wall cladding systems are prohibited.

Membrane Roofing

1. **CN7-17: Single ply membranes are to be used on roofs with minimal equipment and traffic. All other roofs must be modified bitumen, with Energy Star compliant cap sheet. Hot mop applied roof products are prohibited.**
2. A minimum slope of 1/4" per foot is required on all areas of the roof system.
3. Insulation requirements shall meet the current Florida Building Code.
4. A modified bitumen system shall have two inter-ply sheets and a granulated white cap sheet with a 3-year aged reflectivity of 0.55. Base sheet requirements shall be specified by the design professional.
5. A single-ply system shall have a white, 60+ mil PVC membrane that is either mechanically or adhesively applied.
6. Lightweight insulating concrete shall be aggregate-based and have a minimum compressive strength of 125 psi. Roofing systems using lightweight concrete shall include vented metal deck.
7. Cant strips will be installed where recommended by the manufacturer.
8. Plaza roof decks shall have insulation, waterproofing membranes, and protection board systems. Waterproofing membranes shall be flood-tested and protected during construction until the final surface material is installed.

Flashing and Sheet Metal

1. Roof and flashing details shall be based on standard details of the Sheet Metal & Air Conditioning Contractors' National Association (SMACNA) and the National Roofing Contractors Association (NRCA). Dissimilar metals within flashing assemblies shall be separated from each other.
2. Acceptable materials and minimum thicknesses include:
   - Aluminum
   - Stainless steel 26-gauge
   - Lead roof flashing 4#
   - Copper 15#
3. Galvanized metal flashing is prohibited.
4. Stone coping caps are prohibited except at exterior screen wall applications.
5. Unsealed penetrations through flashing materials are prohibited.
6. For cavity wall construction, such as masonry veneer,

through-wall flashing shall be specified and detailed at drainage plane interruptions, including heads and sills of openings, such as doors, windows, and louvers, and end dams at vertical terminations of flashing. *Also see Division 04.*

7. All exterior window assemblies must have stainless steel sill pans with welded end dams that drain to the exterior of the window assembly.
8. All flashing end dams must be welded.

Standing Seam Sheet Metal Roofing

1. Standing seam metal roofs, when approved, shall have true standing seams with concealed clips and fasteners and a Kynar finish. Panels must accommodate expansion and contraction.
2. A minimum thirty-five (35)-year warranty is required.

Roof and Wall Specialties and Accessories

1. Locate roof expansion joints above the plane of the roof with a factory-finished aluminum or stainless steel expansion cover. Detail the termination of the expansion joints. Design expansion joints so that water flows away from the joint.
2. Cap all parapet walls with factory-finished aluminum or stainless steel coping. Slope the top of the coping so that water drains onto the roof and not the building facade.
3. Roof drains shall be factory-painted, cast iron drain assemblies with painted cast iron strainers. Drains shall be installed with factory-furnished clamping rings and set in sumps below the surrounding roof level, 4'-0" by 4'-0" overall size, with a minimum slope of ½" per foot.
4. Exterior downspouts shall be piped to storm drains.
5. Overflow drains or overflow scuppers must be provided. Overflow drains, when provided, must discharge a maximum of two feet above grade.

Firestopping

1. Fire-resistant sealants must be used to seal all firewalls. Fire-resistant sealants shall meet the requirements for assemblies and penetrations.
2. Fire-resistant sealants shall NOT be used at non-rated walls, in order to avoid confusion as to the classification of the wall.

Sealants and Caulking

1. All sealants must meet the standards of ASTM Volume 4.07 Building Seals and Sealants for the system designed. This includes latex sealants, which shall meet ASTM Standard C834.
2. Silicone-based joint sealant shall be used for exterior joints that do not receive a coating, i.e., brick masonry, stone cladding, metal panel systems, curtainwall panel systems, etc.
3. Urethane-based joint sealant shall be used for exterior applications that receive a coating material, i.e., portland cement plaster with a painted surface.
4. Substrate materials may need to be primed to achieve proper adhesion.
5. Sealants shall not be installed or adhered to curtainwall mullion caps. This must be reflected in the Architect's details and all exterior system shop design drawings.
6. **CN7-18: Caulking must meet the ASTM requirements for the system designed, have the maximum warranty available and be reviewed by the UCF Project Manager.**

References:

Air Barrier Association of America (ABAA)
http://www.airbarrier.org

American Society for Testing and Materials (ASTM) Annual Book of Standards http://www.astm.org

ASTM C834-14, Standard Specification for Latex Sealants, http://www.astm.org

ASTM E-814, "Standard Method of Fire Tests of Through Penetration Fire Stops" http://www.astm.org

Factory Mutual Systems Approval Guide (FM Global RoofNav)
http://www.fmglobal.com/

National Roofing Contractors Association (NRCA) Roofing Manual: Membrane Roof Systems http://www.nrca.net

Sheet Metal and Air Conditioning Contractors' National Association, Inc. (SMACNA) Architectural Sheet Metal Manual https://www.smacna.org/

UL Fire Resistance Directory http://database.ul.com/cgi-bin/XYV/template/LISEXT/1FRAME/fireressrch.html

Underwriters Laboratory (UL) Building Materials Directory
http://industries.ul.com/building-materials

Section II - Level-specific Standards

LEVEL A - LABORATORIES

Membrane Roofing

Architectural shingles are prohibited.

Sealants and Caulking

CN7-19: Sealants and caulking shall have a minimum twenty (20)-year warranty.

LEVEL B - CLASSROOMS, OFFICES, CONFERENCE ROOMS, AND OTHER ACADEMIC SPACES

Membrane Roofing

Architectural shingles are prohibited.

Sealants and Caulking

CN7-19: Sealants and caulking shall have a minimum twenty (20)-year warranty.

LEVEL C - RENOVATIONS

Membrane Roofing

Architectural shingles are prohibited.

Sealants and Caulking

CN7-19: Sealants and caulking shall have a minimum twenty (20)-year warranty.

LEVEL D - HOUSING

Membrane Roofing

Architectural, antimicrobial-impregnated, fiberglass shingles, with self-sealing tabs may be used with the manufacturer-approved, self-adhering waterproof membrane over plywood decking. Pressboard, particleboard, and OSB (Oriented Stand Board) are prohibited.

Sealants and Caulking

CN7-19: Sealants and caulking shall have a minimum twenty (20)-year warranty.

LEVEL E - LEASED PROPERTY (FIVE YEAR LEASES OR LESS)

Membrane Roofing

Architectural shingles are prohibited.

Sealants and Caulking

CN7-20: Sealants and caulking used for interior retail applications are required to have a minimum five (5)-year warranty. All other sealants and caulking shall have a minimum twenty (20)-year warranty.

8

Division 8 - Openings

This section includes:

Introduction

Section I - General Standards

Entrances, Storefronts, and Curtain Walls

Entrances and Passageways

Exterior Doors

Interior Doors

Door Frames

Specialty Doors

Roof Access

Mechanical and Electrical Room Access

(cont'd on Page D.8-2)

Introduction

Building openings are a critical point of building construction. Doors and hardware shall be considered as a system that provides for security, life safety, and accessibility.

Section I - General Standards

These standards apply to all projects. Additional Level Specific standards for individual project levels are indicated where applicable.

Entrances, Storefronts, and Curtain Walls

1. Aluminum and glass "store front" entrance doors may be used for public entries. Any additional aluminum framing and glass shall be the same material and design as the door.
2. Aluminum entrance doors shall have 5-inch stiles (minimum) to receive door-mounted closers.
3. For hinge-type doors, only one power door operator in each pair shall be activated by the door opener, for ADA purposes.

Entrances and Passageways

1. **CN8-1: Exterior doorways shall be explicitly designed against water intrusion into the building. Adequate positive slope away from the doorway, with trench drains and/or overhangs, shall be provided. Public entry doors shall be recessed or located under an overhang at a minimum of four (4) feet to prevent water intrusion. Glass awnings are prohibited.**
2. Doors opening out into corridors or other pathways of pedestrian traffic shall be recessed.
3. All primary exit doors from areas where chemicals are used, dispensed, or transported shall swing in the direction of egress, and will be equipped with panic hardware where the hazard or function dictate ease of use for egress.
4. Doors shall be installed so that the gap around the edges of doors and at meeting edges of pairs of doors does not exceed 1/8", except where code requires more stringent tolerances (such as for rated doors) or use of adjoining spaces dictates privacy.
5. Door widths shall provide adequate clearance for moving large equipment, such as electronic lecterns, fume hoods, or other large equipment. Maximum width of single doors should not exceed 36". Use paired doors with removable mullions, for large openings.
6. **CN8-2: Perimeter of building openings shall receive sealant, sealant and backer rod, or weather-stripping.**
7. Doors in renovation projects must match the finish of adjacent floors whenever possible.

Exterior Doors

1. Exterior and service doors shall be minimum 16 gauge galvanized, solid core, flush steel. All exterior doors shall be insulated metal or aluminum storefront doors, with adequate weather stripping utilized to conserve energy.
2. **CN8-3: Exterior wood doors are prohibited.**
3. Glass shall be thermal safety glass and non-reflective.
4. Tops of all exterior doors shall be designed flush and sealed to prevent water accumulation. Top caps where provided shall be smooth to avoid penetrants and seams.
5. All exterior non-public-entry doors, such as service or exit only, without overhead protection shall be provided with minimum aluminum or stainless header drip edge.
6. Overhead and/or double doors shall be provided on all loading docks. Overhead doors shall be at least eight (8) feet high and ten (10) feet wide. Larger doors may be required, depending upon the function of the building.
7. All exterior building entrance doors shall have electronic

Division 8 Contents

(cont'd from Page D.8-1)

Windows
Window Coverings
Hardware, General
Locksets
Closers
Hinges/Butts
Keys and Keying
Panic Exit Devices

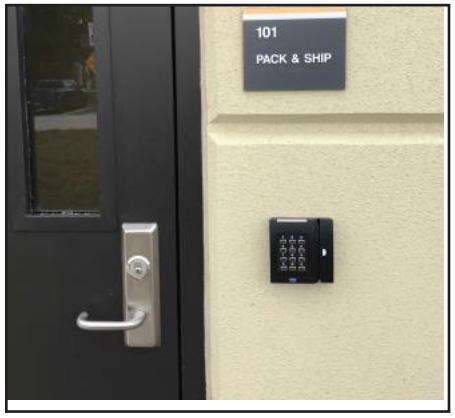

Typical access controlled door

card access. Exterior doors designated by the Department of Security shall also have override mechanical key access. All ADA hardware shall interface with the electronic card access control system.

8. **CN8-4: All exterior roll-up doors must be insulated and manually operated with an integral locking device**

Interior Doors

1. Interior door sizes have a typical width of three (3) feet and a minimum height of seven (7) feet. Doors should be appropriately sized to accommodate equipment and maintenance needs.

2. A clear-coat finish must be used on all interior doors.

3. All interior doors shall be wood unless code or function requires otherwise, with the following minimum features:
   a. All interior wood doors shall be 1 ¾" solid core, and all edges shall be hardwood.
   b. All doors shall be able to accommodate the standard Corbin Russwin mortise locks, with large format interchangeable core (LFIC) key cylinders, keyed to the University's master key system.
   c. Where cutouts for closers are required, the head rail shall be six (6) inches or greater.
   d. Interior metal doors, where applicable, shall be **1 ¾"** minimum 16 gauge and honeycomb filled for structural stability and sound attenuation.
   e. Door silencers shall be included for all doors and additional gasketing provided for all areas with sound privacy and air transfer concerns.
   f. Suitably sized stainless steel kick plates with satin finish shall be provided in all delivery and cart traffic areas.
4. All wood doors must meet the standards of the National Woodwork Manufacturers Association (NWMA).
5.

LEVEL D - HOUSING

All fire rated wooden doors with thumb turn latch shall be provided with a listed wrap around plate to reinforce the lockset area. Custom template is required to match the door hardware. Basis of design by Active Fire Door Products.

6. Classroom, laboratory and chemical use area, and stair/corridor doors shall have vertical style view panels. The Architect shall include the width and height of view panels on detail drawings.
7. All primary entrances to buildings and multi-stall public restrooms must have ADA push-button door actuators. All assembly spaces (50 or more occupants) must have at least one push button ADA actuated door on an accessible path of travel.

Door Frames

1. All door frames shall be at least 14-gauge. Frames shall be hollow metal, fully welded along the entire depth. Exterior hollow metal frames shall be zinc-coated (galvanized or galvannealed) or back-sprayed with an undercoat primer (such as Z Guard 8000). Care shall be taken to ensure that primer is compatible with factory applied surface.

LEVEL C - RENOVATIONS

Knockdown frames are permitted for door retrofits in existing walls.

Corbin Russwin ML 2065

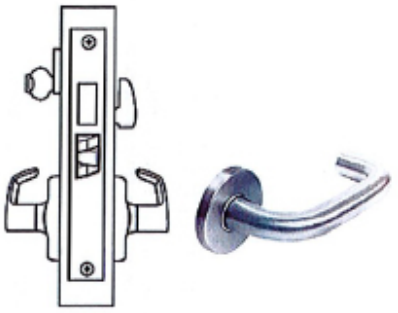

Corbin Russwin ML 2067

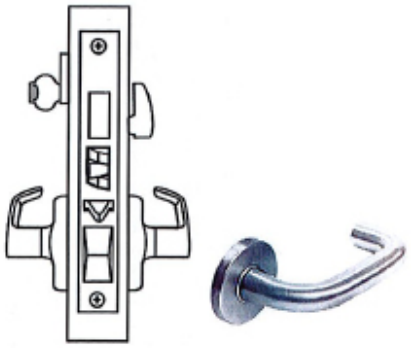

LEVEL E - LEASED PROPERTY (FIVE YEAR LEASES OR LESS

Knockdown frames are permitted within tenant

2. All new double doors (except for mechanical and equipment rooms as noted below) shall be designed with a removable mullion. All new interior double doors with access control shall be provided with a removeable mullion keyed to the University's master key system, unless normal operations of occupant require undivided door openings. Upon request, heavy-duty vertical rod latching devices may be substituted for mullions and shall be approved in writing by the Director of the Department of Security during design. Exposed vertical rods shall be provided with protective cover plates in all areas of materials delivery, and other locations as required by FO or the Department of Security during design.

Specialty Doors

Specialty folding egress doors, or overhead drop-down type shutters for rated opening protection, shall not be used for general area separation, egress, or convenience paths. **CN8-5: Regular, side-hinged type doors requiring minimal annual maintenance shall be specified for all applications.** Shutters may only be considered for service window openings and garage doors.

Roof Access

Provisions shall be made for movement and servicing of rooftop equipment. Depending on the size of rooftop equipment, roof hatches may not be adequate. Review service access to the roof with the UCF Project Manager.

Mechanical and Electrical Room Access

New double doors on all mechanical and large equipment rooms shall be provided with overlapping astragal, and heavy duty top and bottom manual lever-actuated flush bolts which are seated into strike plates with sufficient bolt depth to hold the door firmly.

Windows

1. **CN8-6: Operable windows are prohibited.**
2. Metal windows shall be dual-pane glass, with thermal break insulation-filled frames. **CN8-7: The types of glass and locations used must be reviewed by the University Building Envelope Consultants and approved by the Owner.**
3. Full height window systems must have the appropriate guardrails for fall protection.

Window Coverings

Classrooms shall be equipped with audio-visual and dual shade systems to provide for room darkening and ambient lighting control. The A/E shall coordinate these systems with the UCF Office of Instructional Resources.

Hardware, General

1. **CN8-8: The finish hardware schedule will be provided to UCF by the Architect with the Design Development Phase submittal.** This submittal shall include standard locking and keying system information and the appropriate lock functions, in accordance with **A**NSI/BHMA A156.2 Standard for Bored and Pre-Assembled Locks.
2. When preparing the hardware schedule, the door hardware set numbers shall relate to space and room numbers assigned by UCF.
3. Upon receipt of the Design Development drawings, the UCF Department of Security will review the drawings to

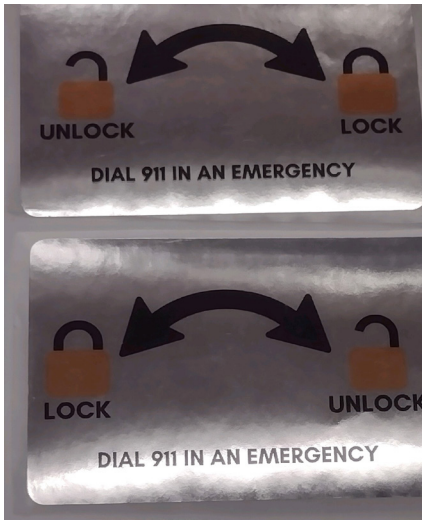

locate and review the required card readers and cameras for each project.

4. Lever-handle building entrance door hardware is prohibited.
5. All access controlled doors shall be electrified with an electrified mortise lock, trim, or latch retraction device. Electric strikes and electromagnetic locks shall only be used with approval from the UCF Department of Security. All doors shall fail secure during a power failure, unless required otherwise by code.
6. All access controlled double doors shall be provided with electrified hardware, door contact, and a Request to Exit (REX) on both door leaves. Where one leaf has no exterior entry hardware and is egress only, electrified hardware may be omitted, but door contact and REX is required.
7. Exterior operable devices shall have a weather resistant integral finish, stainless steel is preferred. Field-applied or factory-applied surface coatings are prohibited.
8. Do not paint door hinges and hardware or fire door labels.
9. All ADA door operator buttons shall be mounted at thirtysix inches (36") above the ADA approach floor area (unless otherwise required by code) and hardwired with integral power, batteries are not permitted. Buttons shall be touchless "wave" style unless security or privacy conditions dictates selective activation. Actuator power switch shall be keyed or located out of public reach.
10. All thumb turn door latching mechanisms shall be arranged for the door to lock with the thumb turn element turned in the direction towards the strike side where at all possible. All thumb turn mechanisms shall be provided with UCF standard lock position indicating decals (see image on next page). Decals are furnished by the Department of Security with a funded request and installed by the project.

Locksets

1. For the purpose of these Standards the secured side of a door is the "outside" requiring key/card for entry. The "inside" is the protected area side of the door requiring one releasing action for egress.
2. Key in Lever: Corbin Russwin CL3300 or CL3500 series (no exceptions).
3. Mortise Lock: Corbin Russwin ML 2000 series MR Lustra LWA (except classrooms and utilities). Corbin Russwin ML2067 to be used for mortise locks requiring office function, and Corbin Russwin ML2065 to be used for locksets requiring classroom or lab function. Electrified equivalents of these models are to be used for doors designated for access control.
4. All locks, exit devices, and removable mullions will be operated by large format IC core.
5. All auxiliary locks shall be Corbin Russwin.
6. All rim/mortise locks shall be provided with a stainless steel hardened protective collar to prevent tampering.
7. All classrooms shall be provided with Locked (red)/ Unlocked (green) status indicators on the inside only with text and icon. BOD is Corbin Russwin V01 Single Indicator.
8. Knurled levers shall be installed for the entrance side of electrical, mechanical, communication, and elevator equipment doors.

Closers

1. All door closers shall be surface-mounted, except for exterior, storefront, concealed applications for which the closer shall be mounted in the door header.
2. All surface-mounted door closers shall be mounted on the room side of doors and not visible from corridors, lobbies, or other public spaces.
3. Preferred Closer Hardware:

- Corbin Russwin DC 6210 M54
- LCN Smoothie 4000 series
- LCN 4040 series
- LCN 2030 series (concealed)

Hinges/Butts

1. All new doors and frames shall be installed with a minimum of four hinges, with four screws in each hinge-leaf.
2. Exterior entrance doors shall be provided with heavy duty continuous hinge and coordination with access control power transfer components. All other exterior doors are to have heavy duty 4 ½ x 4 ½ stainless ball bearing hinges, with non-removable pins.

LEVEL B - CLASSROOMS, OFFICES, CONFERENCE ROOMS, AND OTHER ACADEMIC SPACES

New nominal seven-foot (7') tall doors and frames without closers to individual private offices may be provided with three (3) heavy duty hinges per leaf.

LEVEL C - RENOVATIONS

New nominal seven-foot (7') tall doors leaves installed in existing three (3) hinge frames may be provided as three (3) heavy duty hinges per leaf.

LEVEL E - LEASED PROPERTY (FIVE YEAR LEASES OR LESS)

Three (3) heavy duty hinges per leaf may be used within tenant spaces where maintained by the tenant.

3. All hinges used with door closers shall be ball bearing.
4. If the exterior door(s) call for offset pivots, the preferred hardware is Rixon.

Keys and Keying

1. All lock cylinders shall be furnished in UCF's restricted keyway.
2. The UCF locksmith shall designate which keyway will be provided for each project.
3. Access controlled doors with exit device hardware shall not contain a dogging kit or other ability to mechanically keep the door in an unlocked state.
4. Non-electrified (non-access controlled), non-exterior doors with key override on panic exit devices shall include a thumb turn on the panic exit device that can lock/unlock the door without requiring a dogging key.
5. The keying schedule will be prepared by the hardware supplier, under the direction of the University Lock Shop and provided for owner review with sufficient time to accommodate the project schedule. All keying schedules shall be approved by the University Lock Shop Manager and Director of Security Management prior to production.
6. The key shall be stamped one side "Restricted Do Not Duplicate" and the other side with the code identified in the key schedule.
7. Construction cores shall not be on the University's keyway. The University Lock Shop shall determine acceptable keyways to use during construction projects. Service access for university staff shall be provided to university equipment located within construction zones. Emergency responder access shall be coordinated for all secured areas.
8. Permanent keys, along with the keying schedule, shall be sent via secured delivery with record transmittal direct from the factory to the University Lock Shop.

Panic Exit Devices

1. All single exterior exit doors shall have surface-mounted devices that latch to the door frame.
2. All double exterior exit doors (except for mechanical and equipment rooms as noted above) shall have removable mullions that are keyed according to the provided key schedule.
3. Surface-applied vertical rods are prohibited.
4. All exit devices and mullions operated by key shall use large format interchangeable core cylinders. This includes the keyed dogging function.
5. All ADA hardware shall interface with the electronic card access control system. The ADA button on the inside of the door shall always be operable to allow egress. The ADA button on the outside of the door shall only be operable when the door is in an electronically unlocked state or when a valid access credential is presented.
6. All exit devices on access controlled entry doors shall support electrified latch retraction or the use of an electrified trim. Exit device hardware for aluminum and glass storefront doors is preferred: Corbin Russwin ED 4000/5000 series or Von Duprin 98/99 series.
7. Exit device hardware for standard service doors is preferred: Corbin Russwin ED5000 series or Von Duprin 99 series.
8. Keyed mullions are preferred: Corbin Russwin KM700 or Von Duprin KR1654 or KR4954.

THIS PAGE INTENTIONALLY LEFT BLANK

9 Division 9 - Finishes

This section includes:

Introduction
Section I - General Standards
Selection and Approval of Finishes
Gypsum Board
Lath and Plaster
Ceramic Tile
Quarry Tile
Acoustical Ceilings
Concrete Flooring
Rubber and Vinyl Flooring
Carpeting
High Hazard Area Flooring
Painting and Coating
Finish Schedule

Introduction

This section contains the requirements relating to finishes, including lath and plaster, gypsum board, tile, acoustical treatment, ceiling surfaces, flooring, carpet, and paint.

Section I - General Standards

These standards apply to all projects. Additional Level Specific Standards for individual project levels are indicated where applicable.

Selection and Approval of Finishes

1. Only Facilities and their authorizied representatives are approved to apply finishes to building surfaces.
2. **CN9-1: The selection of materials shall be assessed for long-range, life-cycle cost analysis. Standard color and material templates are available from UCF Planning Design and Construction for selecting interior finishes. For projects that would like to request alternates from the standard templates, samples must be approved in advance as noted below.**
3. **CN9-2: For major projects, the Design Architect or Interior Designer shall provide a non-returnable, detailed interior color board, including all paints, wall tiles, grouts, wood door finishes, millwork, cabinet/ countertops, and any other publicly visible interior finishes. Preliminary finish options (paint, base carpet, tile, toilet partitions, exterior materials) shall be presented at the Design Development phase workshop. The final color board shall be submitted and approved by completion of the 50% Construction Documents Phase.**
4. **CN9-3: Samples of ALL finishes and finishing material other than those in the standard templates must be submitted to the University Architect and the AVP of Facilities Operations for approval PRIOR TO ORDERING**
5. Traditional vinyl wall coverings and wallpapers are prohibited.
6. Cloud ceiling designs in public spaces are prohibited.
7. Commercial grade decorative graphic “wraps” installed by qualified professionals are permitted with appropriate approvals.
    a. Decorative graphics are considered specialty departmental equipment. The requesting department is responsible for all costs associated with their install, repair, and removal. This includes surface preparation prior to install and to return surfaces to prewrap condition when removed. Painting over wraps is not permitted.
    b. Surfaces shall be prepared to Level 4 drywall finish with semigloss paint that has cured at least 5 days prior to install.
    c. Wraps shall be low gloss, non-reflective, and applied with substrate compatible low VOC adhesives.
8. Approval from UCF Communications and Marketing is required for all applied graphics, dedication plaques, and similar visible features prior to installation.
9. All products shall be of American manufacture.
10. All areas in the vicinity of water or ice dispensing such as drinking fountains, water treatment, break area sinks, and ice machines shall be provided with a slip resistant, nonabsorbent wipeable tile or similar type flooring. Alternative arrangements shall be approved by the Director of FO.

Gypsum Board

1. All gypsum board shall be a minimum of 5/8” thickness.
2. Moisture-resistant gypsum board (green board) shall be installed within five feet of wet areas.
3. The substrate for shower wall tile shall be 1/2” minimum fiberglass-reinforced cement board.

4. **CN9-4: Gypsum wall board shall not be installed until the building is adequately dried-in.**
5. All drywall must be placed on metal channels or metal studs a minimum of 16" on center.
6. Stainless steel outside corner guards must be used in high traffic areas and where mobile equipment is utilized. Stainless should be adhered with construction adhesive and not with screws or double stick tape.
   - Classrooms: 2" x 2" x 4"
   - Labs: 3" x 3" x 4'
7. Control joints shall be designed into the interior elevation.
8. The following finish grade levels are required by space type, per Gypsum Association GA-214:
   - Level 0 finish: prohibited
   - Level 1 finish: plenum areas above ceilings and attic spaces
   - Level 2 finish: garages, warehouse storage, and closets
   - Level 3 finish: mechanical rooms, electrical rooms, and telecommunications/data rooms
   - Level 4 finish (with USG Sheetrock® Brand Tuff-Hide™ Primer-Surfacer or similar Owner-approved product): classrooms, corridors, offices, conference rooms, atriums, and dining rooms
   - Level 5 finish: laboratories, clinics, operatories, auditoriums, behind special surface walls, and elsewhere as recommended by the Architect.

Lath and Plaster

Lath and plaster systems must use galvanized steel metal lath in conjunction with acoustic plaster to eliminate rust stains. All lathing accessories shall be made of zinc alloy.

Ceramic Tile

1. Follow the manufacturer's recommended installationinstructions, including the application of any recommended floor finish or sealer, and the current edition of "The Handbook for Ceramic Tile Installation" published by the Tile Council of America (TCA).
2. Restroom floors shall have dark color grout.
3. A fluid-applied, synthetic polymer, waterproof membrane shall be applied on all shower room ceramic tile floors. The membrane shall be compatible with the mortar. All shower floors must be installed with a pan.
4. An integral nosing is required on all stair treads with a tile surface. Nosings must be filled solid, not hollow.

Quarry Tile

1. Quarry tile with an integral abrasive surface and corebase is the required material for kitchens.
2. Quarry tile used for exterior slab finishes or stairs shall have an integral non-skid surface.
3. An integral nosing is required on all stair treads with a tile surface. Nosings must be filled solid, not hollow.

Acoustical Ceilings

1. The minimum acceptable Noise Reduction Coefficient (NRC) is 0.70.
2. Adhesive tiles are prohibited.
3. Acoustical ceilings shall have surface-burning characteristics tested per ASTM E 84 and comply with ASTM E 1264 for Class A products.
4. All new ceiling designs with acoustical ceiling tiles shall be sized for 24" x 24" tiles.
5. Suspension systems shall be hung only from structural framing members or the concrete deck above. Placement of cast-in-place anchors and expansion anchors shall be coordinated to ensure that no anchors are placed in precast concrete joists. Do not hang suspension systems from metal roof deck, sheet metal ductwork, pipes, or conduit.

6. Where widths of ducts and other construction within ceiling plenum interfere with the location of hangers at required maximum spacing (4'-0" on-center) to support standard suspension system members, supplemental suspension members and hangers in the form of trapezes or equivalent devices shall be installed.

Concrete Flooring

1. Interior unfinished concrete flooring is prohibited.
2. All areas shall be provided with a slip resistant finish. Documentation supporting slip ratings shall be submitted for review prior to installation.
3. Painted concrete flooring is prohibited.

LEVEL E - LEASED PROPERTY (FIVE YEAR LEASES OR LESS):

Painted concrete flooring is acceptable where maintained by the tenant as part of the lease agreement, and with appropriate slip resistance.

4. Smooth, level, minimum Class 3 finished polished sealed concrete shall be provided unless a specific finish is indicated for unique areas.
   a. All non-public facility support type service spaces such as housekeeping, recycling, mechanical, electrical, equipment chases, IT, elevator, etc. flooring shall be provided with manufacturer compatible components of slip resistant water-based epoxy primer base and final top coats to uniform color coverage with surface preparation as dictated by product guidelines.
   b. See UCF IT standards for additional criteria.
   c. Areas with floor drains and subject to wash down activities such as trash/recycling shall be sloped towards the drain as appropriate for the operations, and provided with seamless cove base.
   d. Alternatives shall be approved by the Director of FO during design.

Rubber and Vinyl Flooring

Where installed, stair treads and risers shall be provided with finishes installed as a single piece across the width of the stair. Nosings must incorporate an integral contrasting method to differentiate the edge of the step in descent. A premium adhesive shall be used for installation when used on stair treads and risers.

Carpeting

1. Carpet tile shall be used in all applications, unless approved by the UCF Project Manager.
2. The carpet fiber shall be high quality nylon with no olefin fibers and shall have stain-resistant treatment.
3. **CN9-5: All carpet must be directly attached to the finish floor surface with manufacturer approved adhesive methods. All attachment systems shall be approved prior to installation.**
4. Carpet adhesives shall be of low odor/solvent content.
5. Integral multicolored schemes shall be used.
6. Carpeting applied to vertical surfaces is prohibited.
7. **CN9-6: Carpeting in stairways, break rooms, and food service areas is prohibited.**
8. Carpet tiles and overage shall be packaged in appropriate protective wrapping, labeled, and delivered to the Owner, in coordination with the attic stock turnover requirements.
9. A digital copy of the carpet manufacturer's maintenance manual shall be delivered to the Owner with other digital O&M materials.

Knight Notes

9-1: *In an effort to maintain uniform finishes the University has surveyed the campus buildings and established standard PPG color binders for most facilities. Binder information is available from FO for review upon request for matching. Proposed finishes are preferred to utilize existing shades already in use in a facility where at all possible.*

High Hazard Area Flooring (General Laboratory, Shop and Hazardous Liquid Storage and Use Area Flooring)

1. Flooring must be non-pervious, one piece, and liquid tight, with covings or equivalent methods to ensure spills cannot seep underneath adjacent walls and cabinetry. This can be achieved by use of epoxy-coated concrete slab, linoleum, or sealed/treated concrete. Flooring must meet or exceed ASTM F 925 for the materials commonly used in proposed research space. Carpet, tiles (including VCT) and plank materials are not acceptable. All flooring penetrations for the area must be sealed to prevent spills from seeping to the floors below.
2. Areas with heavy equipment require flooring that can withstand the load without damage, penetration, or indentation.
3. BSL3 labs require monolithic, non-pervious floors that are easily decontaminated.
4. Areas with cryogen use (dewars, magnetic facilities, etc.), washrooms that contain sterilization facilities, high-temperature equipment areas, and/or welding, brazing, or glass-blowing activities must be able to withstand extreme temperatures without damage.

Painting and Coating

1. Contractors should take note that NO PAINTING NOR OTHER SUBSTANCES can be applied or adhered to UCF low voltage cabling during or after the installation process. ANY CABLING WITH PAINT OR OTHER SUBSTANCES SHALL BE CONSIDERED DAMAGED and warrenty voided. The contractor is responsible for the proper protection of existing and new UCF low voltage cabling throughout the area affected by work. The contractor SHALL BE RESPONSIBLE FOR ALL COSTS FOR CABLE REPLACEMENT by UCF PDC low voltage contractor for all cable that is damages by debris from their work or the work of their subcontractor(s).
2. **CN9-7: All coatings and paint systems shall be exclusively PPG manufactured products. No substitutions or color matching with other brands are permitted. The University reserves the right to reject color match and require verification of DFT for final acceptance.[KN]**
3. All paints shall meet LEED criteria for Low Volatile Organic Compounds (VOC).
4. All paint materials shall be applied in accordance with manufacturers' directions at not more than the recommended spreading rate. Finished minimum Dry Film Thickness (DFT) shall be provided within manufacturer stated ranges, and field verified upon request.

    a. All new untreated, remedially stripped, or incompatible surfaces shall be properly prepared and provided with an appropriate primer. Such surfaces shall be provided with a minimum of three (3) coats (1 primer + 2 final) or additional as needed to achieve sheen and uniform finish.

    b. Basis of design for primer shall be PPG Seal Grip Gripper Interior/Exterior 100% Acrylic Latex Primer or PPG Direct To Metal (DTM) Primer.

    c. Over existing compatible painted finishes, apply at least two (2) coats of paint to achieve a finished product, except where more durable finishes are required under the scope of the project.

    d. All areas with partial repaint or touch-up shall be painted from a bordering architectural feature, such as a joint or wall edge to similar. A continuous section finish without visible transition seams shall be provided.

    e. Paint manufacturer representatives shall be authorized to perform field verification of product application methods.

5. All exposed exterior metal components and trim to be provided with a finish, applied or inherent to prevent corrosion. Typical are yellow paint on gas meters and components, yellow painted or sleeved bollards, blue and red backflow preventers, or matched painted finishes for exposed conveyance piping in stairwells and common areas.
6. Exposed interior fire suppression piping shall be painted in finished areas and stairwells.
7. Do not paint door hinges and hardware or fire door labels.
8. Interior coating system shall be as indicated in **FIGURE 9-01 AREA TYPE FINISH.**
9. Surfaces shall be provided with product coating types as indicated in **FIGURE 9-02 PRODUCT TYPE.** Alternative coating methods may be considered for special circumstances with supporting justification, and shall be approved during design by the Director of FO.
10. Submittals shall be provided for all products for owner review prior to application.

Interior Area Type	Wall Finish	Ceiling Finish
Concrete or CMU All Locations	Semi-Gloss	(by use type below)
Gypsum Board Dry Areas: Classrooms, Offices, Computer Labs, Conference Rooms, Corridors, Common Areas, Dry Storage, and similar.	Eggshell	Flat
Gypsum Board Potentially Wet Exposure: Restrooms, Locker Rooms, Laboratories (Wet), Housekeeping, Kitchen & Break, and similar.	Semi-Gloss	Semi-Gloss
Electrical IT, Mechanical Rooms	Semi-Gloss	Flat
LEVEL D HOUSING Residential Housing Areas (All)	Semi-Gloss	Semi-Gloss

FIGURE 9-01 INTERIOR AREA TYPE FINISH

Surface Type	Product
Exterior Concrete	Primer + Flat Acrylic.
Exterior Unpainted Brick or Concrete	Professional-Grade Silane or Siloxane Water-Repellent Solution.
Interior Drywall, CMU or Concrete	Primer + Latex. Finishes per Figure 9-01.
Metal Doors and Frames	Water Based DTM Primer + DTM Semi-Gloss Final Finish (Interior or Exterior Rating as Appropriate).
Stained woodwork (trim, doors, etc.)	System consisting of sanding sealer; waterbased color stain; and water-based clear satin polyurethane finish.
Ferrous Metals	Water Based DTM Primer + DTM Semi-Gloss Final Finish (Interior or Exterior Rating as Appropriate).

FIGURE 9-02 PRODUCT TYPE

11. Paints and coatings shall not be included in attic stock unless specifically requested by the Owner. Surplus or partially used containers of paints and coatings shall not be left on site.

Finish Schedule

CN9-8: Contractor shall provide a turn over schedule of all installed paint, coatings, flooring, and specialty finish materials provided by the project. The schedule document shall include the minimum information shown in the spreadsheet template **FIGURE 9-03 PROJECT FINISH SCHEDULE** at the end of this section.

PROJECT FINISH SCHEDULE INFORMATION						
BUILDING NAME				PROJECT/WO #		
BUILDING NUMBER				DATE		
PAINT AND COATINGS						
ROOM NUMBER	MANUFACTURER	PRODUCT NAME	MNF ID#	COLOR	FINISH	SPECIAL NOTES
FLOORING						
ROOM/AREA	MANUFACTURER	PRODUCT NAME	MNF ID#	COLOR	ADHESIVE	SPECIAL NOTES
TILE						
ROOM/AREA TILE/ GROUT	MANUFACTURER	PRODUCT NAME	MNF ID#	COLOR	SPECIAL NOTES	
T						
G						

FIGURE 9-03 PROJECT FINISH SCHEDULE

10

Division 10 - Specialties

This section includes:

General Standards

Markerboards

Tackboards

Building Directory

Interior Signage

Exterior Signage

Letter Light Signs

Toilet Compartments

Wall and Door Protection

Toilet Accessories

Fire Extinguishers

Storage Specialties

(cont'd on Page D.10-3)

~~Introduction~~ General Standards

Specialties covered in this division include a variety of products and equipment, including items for instructional use, signage, storage, and toilet compartments.

~~Section I - General Standards~~

These standards apply to all projects. Additional Level Specific Standards for individual project levels are indicated where applicable.

Markerboards

Marker Boards shall be installed to comply with Accessibility Standards - Top of board to be at 7'-0" unless otherwise noted or dictated by code as a function of board size.~~The top edge of a markerboard shall be mounted at 7' 0" above the finished floor and have at least four map hooks per eight feet of length.~~

Tackboards

Tackboard sizes, materials, finishes, and locations shall be approved in advance by the UCF Project Manager KN 10-1.

Building Directory

A building directory shall be provided ~~The Contractor shall install a glass enclosed, lockable, nonilluminated Building Directory~~ near the main entrance of each new building~~, location to be determined by the Architect~~. The style and content ~~Directory~~ shall include sufficient information and general wayfinding details as determined during the design/submittal review. Updates to existing directories shall be provided with renovations as needed.

- ~~Building name~~
- ~~Pegasus logo in the Directory header~~
- ~~Major room names~~
- ~~Office names~~
- ~~Room numbers~~
- ~~Changeable, individual message strips; strips shall have a black background with white letters.~~

Interior Signage

1. **CN10-1: All assigned rooms shall have University standard signage denoting the room number.**
2. Branding and visual features such as signage should review UCF Marketing's brand guidelines. Signage standards for the Main Campus, Rosen Campus, and Downtown Campus are provided on the PDC website under the "RESOURCES" tab. ~~Gotham font shall be used for interior building signage unless otherwise noted herein. Gotham Medium shall be used where ADA applies~~. A signage packet shall be provided for review prior to fabrication.

   Level C - Renovations

   Renovations with incidental signage scope should match the existing predominant sign style in the area with adjustments as needed for current ADA compliance.

3. Signage standards for the UCF Health Sciences Campus at Lake Nona are provided on the PDC website under the "RESOURCES" tab. ~~listed in the Division 10 reference section.~~
4. The UCF Space Administration office shall have final assignment authority for room numbers to all spaces. The design professions will provide a proposed numbering plan prior to the review of the Design Development phase deliverable. Space Administration will confirm and or adjust the numbering which shall be documented on the contract plans from Design Development forward. The numbering of spaces shall follow a logical sequential increasing order to allow pedestrians to follow the series incrementally through primary passageways. Interior suites should increase in a clockwise pattern Stairwells and similar repeated vertical spaces shall maintain the same identifier increased by floor number place holder where possible. Additional room number guidelines are available from Space Administration.

Knight Notes

10-1: *Placement of large tackboards or cork type wall coverings in common areas is strongly discouraged. Tackboard location and styles to minimize fastener projection hazards along public ways. Surfaces shall self-healing for surface longevity.*

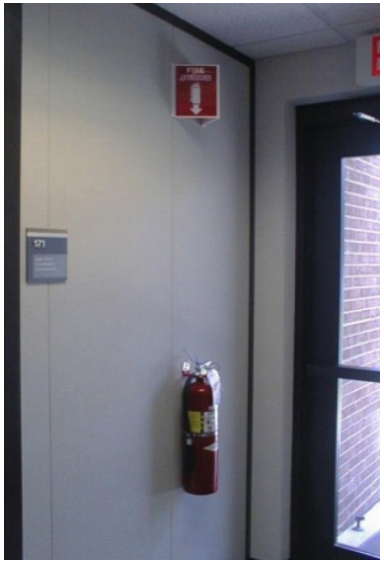



~~Signage standards for the UCF Health Sciences Campus at Lake Nona are listed in the Division 10 reference section.~~

5. Each building shall be provided with the following interior signage:
   - In addition to the minimum code-required information, each stair floor-level landing shall be labeled with the building number, stair number, and floor level.
   - Systems and piping within stairwells shall have identification.
   - Emergency Guides shall be located at the entrance of classrooms and laboratories, near the light switches. The Guide shall be hung in such a way so that the Guide is easily removable. The Guide shall measure 40" from the finished floor to allow accessibility. The Guide shall be furnished by UCF Department of Emergency.
   - Specialty signage shall be presented to the UCF Project Manager and must be approved by the Associate Vice President of Administration and Finance (University Operations).
   - Fire extinguisher signs, as pictured on page D.10-2, shall be provided at all fire extinguisher locations. The sign shall be minimum 1/8" thick rigid white acrylic in a V-shape (70 degrees), approximately six inches tall, nine inches wide, and five inches deep. Signs shall be mounted with a minimum of two screws per side edge at a height of eighty-four (84) inches above finish floor to the bottom of the sign, or higher as coordinated with area finishes, for the best visibility. Where multiple signs are visible, such as in a long corridor, their heights shall be in vertical alignment.
   - Field color shall be red for emergency warning and general utility instruction signs. Sign text color shall be white. Sign text font shall be Arial.
   - Use mechanical attachment of the sign blad holder where possible. Mechanically attach the holder to the wall, and attach the blade separately. If adhesive is used, install with high-strength, double-faced tape.
   - Signs mounted perpendicular to walls shall be mechanically attached to an appropriate substrate (metal studs, metal backing, etc.), not from suspended ceilings, lights, etc.

6. Every laboratory work space shall be provided with a nominal 11" x 17" evacuation map posted by every lab room exit door. Each location will be custom oriented to reflect the proper direction as it is posted and will outline with directional arrows a primary and secondary exit path. An aerial window will reflect the evacuation meeting locations. The maps will include a legend and will show at a minimum the following information: compass orientation as posted, overall general floor diagram and permanent walls, locations of EEWSS units, and fire extinguishers. First aid kit locations and AEDs will be included if known. The initial posting of each map shall include and permanent and durable acrylic screw-mounted sleeve to receive future updated inserts. The design shall be generated in layers to allow for future updating and a copy of each location provided electronically to the Owner for future updating. Proof of concept and each map will need to be reviewed by EH&S prior to final installation. Renovations that majorly effect the floor plan of a space must also include updates and reposting of all effected maps. These graphics must be generated by the Architect and installed by the Contractor.

7. Life safety systems may require additional signage for the clarification of remote or hidden controls. Example: where a specialty suppression system is remotely located from the room of protection, both rooms will receive signage to indicate the specialty and control locations, such as at room 100 "Pre-action Suppression System Area - Controls in Room 200" and at room 200 "Pre-action Controls for Room 100 Within."

Exterior Signage

Each building shall be provided with the following exterior signage:

1. **CN10-2: All exterior building signage must follow the UCF Marketing Guidelines. The Gotham font shall be used for all exterior building signage.**
2. Include "No Parking Fire Lane" signage at all locations deemed necessary by the UCF Building Code Office and the State Fire Marshal, including but not limited to signage at the fire department routes/lanes, hydrants, back flow preventers, and post indicator valves.
3. Include "No Parking Fire Lane, FDC" signage at all fire department connection (FDC) locations.
4. The emergency disconnects to each building shall be labeled separately as "Main Shunt" or "Emergency Shunt." The numerals 1 of 3, 2 of 3, etc., shall be included as appropriate for each situation. Where disconnects are within an enclosed room, signage listing, "Disconnecting Means Within," in large letters, shall be provided adjacent to the room.
5. Each fire department connection, backflow, or post indicator valve shall have a permanent hangtag denoting the building number (###) and building abbreviation.
6. Temporary directional signs shall be used during construction on the site to aid in campus wayfinding for vehicular and pedestrian traffic. Coordinate locations with the UCF Project Manager.
7. Permanent directional signs shall be planned and installed on the site to aid in campus wayfinding for vehicular and pedestrian traffic and must meet existing signage standards. These signs include building identification signs, vehicular directional signs, kiosk, etc. Quantities and locations of directional signage shall be coordinated with University Operations.

   ~~Pavement marking and graphics shall be included in the construction documents.~~
8. Roadway signage shall be designed in accordance with the Florida Department of Transportation (FDOT) and the Manual of Uniform Traffic Control Devices (MUTCD).
9. Each building address shall be identified by an aluminum sign with minimum length of 12 inches x 11 inches in width, single sided with 1-2 color intermediate vinyl colors. The sign shall be .040 aluminum material plate with rounded corners with 1/4 inch holes at each corner. The font shall be Gotham with upper and lower case letters. Building numbers shall be 6 inches in length with road name letters 2 inches in length. The sign shall be installed at a location visible from the fire lane, the FDC, and the main building entrance. Larger buildings may require additional signs. See attachment.

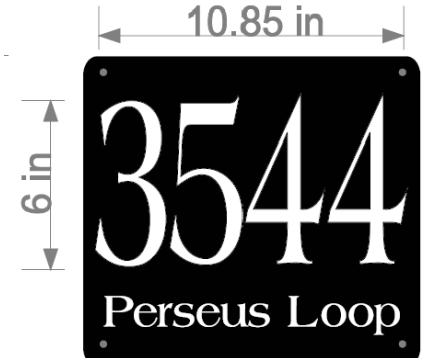

Letter Light Signs

Placement of letter-light signs and of the Pegasus logo, and size of the Pegasus logo, shall be reviewed on a project-by-project basis. Recommendations by the Architect must be presented at the Design Development phase for review and approval.

- Letter-light signs identifying building names and the Pegasus logo shall be provided on all major campus buildings.
- Both the letter-light signs and the Pegasus logo shall be backlit. See Division 26 for lighting equipment standards.
- The font shall be Gotham, with upper and lowercase letters.

- Color of the letters and the Pegasus logo shall be reviewed and approved by UCF Marketing and Communications ~~Pantone 874.~~
- The Pegasus logo shall always face to the right.

Toilet Compartments

CN10-3: Toilet partitions shall be provided with sufficient overhead and or floor mounted supports to ensure stability. Minimal floor proximity supports are preferred, but where used finishes and fasteners shall be corrosion and stain resistant. All interior restroom finishes, including toilet partitions, must be approved by the University Architect or designee. Partitions shall be designed to the following minimum standards:

- Toilet partitions and urinal screens shall be constructed from high density polyethylene (HDPE) resins a minimum of 3/4" thick.
- A single 316 stainless steel rigidly mounted post shall be floor mounted at every 90 degree transition or similar is preferred.
- All toilet partition panels and doors shall have rounded edges.
- Door hinges shall be continuous and self-closing. Door strikes/keepers, latches and housings, and continuous wall brackets shall be made of 316 stainless steel.
- Provide one coat hook on the back of each toilet stall door.
- Provide a minimum of three connections (two end and one middle) per non-door panel in order to prevent bowing of panels.

Wall and Door Protection

Stainless steel corner guards with a minimum 2" width and minimum 4' height shall be used in high-traffic areas and where mobile equipment may be used (classroom hallways, atrium spaces, laboratory spaces, service corridors, etc.). Recessed corner guards are prohibited. The Architect shall indicate locations of corner guards on finish plans.

Toilet Accessories

1. The Contractor shall provide and install the following:
   - Feminine napkin disposal receptacle: A partition-mounted, stainless steel receptacle with cover provided in each female or family toilet compartment.
   - Mirror: stainless steel-framed, or as selected by the Architect or Interior Designer.

2. **CN10-4: UCF will provide, and the Contractor will install:**
   - **Soap dispensers, toilet tissue dispensers, and paper towel dispensers**
   - **Free-standing, stainless steel waste receptacles**

Brand	Type	UCF Stock #	Stock #
Go-Jo	Soap Dispensers (wall mount) 7" x 5.1" x 11.8"	900001062	L05300 Dade Paper
Kimber-ly-Clark	Paper Towel Dispensers (wall mount) 13.3" x 13.5" x 10"	900001066	09766 Dade Paper
Geor-gia-Pacific	Toilet Tissue Dispens-ers (wall mount) 1.12" x 10.12" x 6.75"	900001063	374102 Dade Paper
Tough Guy	Sanitary Napkin Dispensers (wall mount) 9.25" x 11" x 4.25"	None	1ECK9 Grainger

3. The Architect shall include locations and product information on contract documents.

Fire Extinguishers

Fire extinguishers shall meet the following requirements:

1. Fire extinguishers shall be located in open common areas or corridor spaces in friction latch semi-recessed or recessed cabinets. Key-locked or break-glass type fire extinguisher cabinets are prohibited. Wall mounted units where used for specific hazards or service areas shall be j-hook type. Wall mount units in kitchens for K class shall be heavy-duty strap in type to minimize dislodgement. Example: Amerex Model 810.
2. Outdoor mounted cabinets shall be suitably weather, UV, and cleaning chemical resistant. Cabinets to be red fiberglass with easy view window and full gasket-sealed door bearing white lettering “Fire Extinguisher”. Hardware to be full length stainless steel hinge and quick opening latches. Units shall be j-hook mounted within with mounting penetrations sealed after installation. Example: Brooks FGC10.
3. Extinguishers shall have all metal head assemblies with j-hook and eye type head mount attachment. Plastic is prohibited.
4. All extinguishers shall be placed and sized for preferred five-pound coverage spacing. Ten-pound-size or larger may be used where code requires larger for a specific hazard.
5. Carbon dioxide (or approved equivalent) extinguishers shall be used where clean agent is needed. The use of Halon extinguishers is prohibited.
6. Units shall be tagged by the Contractor within three months of the Certificate of Occupancy date.
7. Basis of design manufacturers are Amerex, Badger, and J.L. Industries, Inc. Alternate manufacturers must be approved in writing by EH&S prior to bidding and selection.

Storage Specialties

1. Pallet racking systems shall consist of teardrop-style, 2” adjustable, 192” high by 42” deep uprights, with a minimum weight capacity of 18,000 pounds; 96” or 120” beams, with a minimum weight capacity of 5,400 pounds. The top beam shall have full-width, welded, open-wire decking; all remaining beams shall have front-to-back safety crossbars (4 per beam).
2. Pallet racking systems shall have post protectors at the upright on both ends of each row, bolted securely to the floor. All pallet racks shall be securely fastened to the floor, and back-to-back rows shall be tied together with steel row spacers for stability. Beams shall be securely attached to uprights, and have a safety lock. Each rack location shall have three (3) pairs of beams. Spacing shall be determined based upon individual products to be stored.
3. All uprights and beams shall have labeling that clearly indicates the maximum rack load capacity, in compliance with ANSI Rack Manufacturers Institute (RMI) guidelines, per ANSI MH16.1-2012 - Specification for the Design Testing and Utilization of Industrial Steel Storage Racks. Labels shall indicate weight limits, RMI caution, and a RMI compliance statement.
4. All pallet rack systems shall include a comprehensive design for fire suppression and alarm annunciation detailing the additional devices needed, such as in rackheads, row mounted alarm devices, and protective guards for all equipment.

Load Points and Fall Protection

1. All installed overhead, hoist, cranes, and blocks shall be load tested and permanently labeled with their approved load. Complete engineering shall be provided for all points designated as a load bearing or tie off. Test documents where required shall be provided for installation acceptance.

2. Openings adjacent to elevated equipment that pose a fall risk shall be provided with integral fall protection means.
3. Roof hatches shall be provided with OSHA compliant guardrails with a self-closing swing gate. The railing system shall have a minimum of two (2) permanently attached integrated grab bars for worker hold points. Ladder safety posts or grab-bars that are installed on the top of the fixed ladder inside the building are prohibited. Rails shall be constructed of corrosion resistant metal with stainless fasteners and minimum five (5) year warranty, aluminum rail is preferred. Rail system shall be attached in a manner to avoid penetrating or wearing the roof membrane.
4. Ladder docks shall be provided where portable laddersare laid against elevated surfaces.
5. Fixed ladder rungs shall be provided with integral antisliptread surfaces. Perforated type tread preferred, appliedadhesive tape is not acceptable.

References:

ANSI MH16.1-2012 - Specification for the Design Testing and Utilization of Industrial Steel Storage Racks

Florida Department of Transportation http://www.dot.state.fl.us/

ICCC A117.1-2009 Accessible and Usable Buildings and Facilities

Manual of Uniform Traffic Control Devices http://mutcd.fhwa.dot.gov/

Signage Standards for the UCF Health Sciences Campus at Lake Nona http://fp.ucf.edu/wp-content/uploads/resources/Standards%20and%20Requirements/Final-UCF-HSC-Interior-Signage-Spec.pdf

UCF Marketing Guidelines http://brand.ucf.edu/design/

~~CONSTRUCTION IDENTIFICATION SIGN~~

~~*The construction identification sign must be reviewed and approved by the UCF Project Manager and the Director of Planning, Design and Construction. This is to be the only construction identification sign on the jobsite. Contractors and subcontractors may not have their own signs.*~~

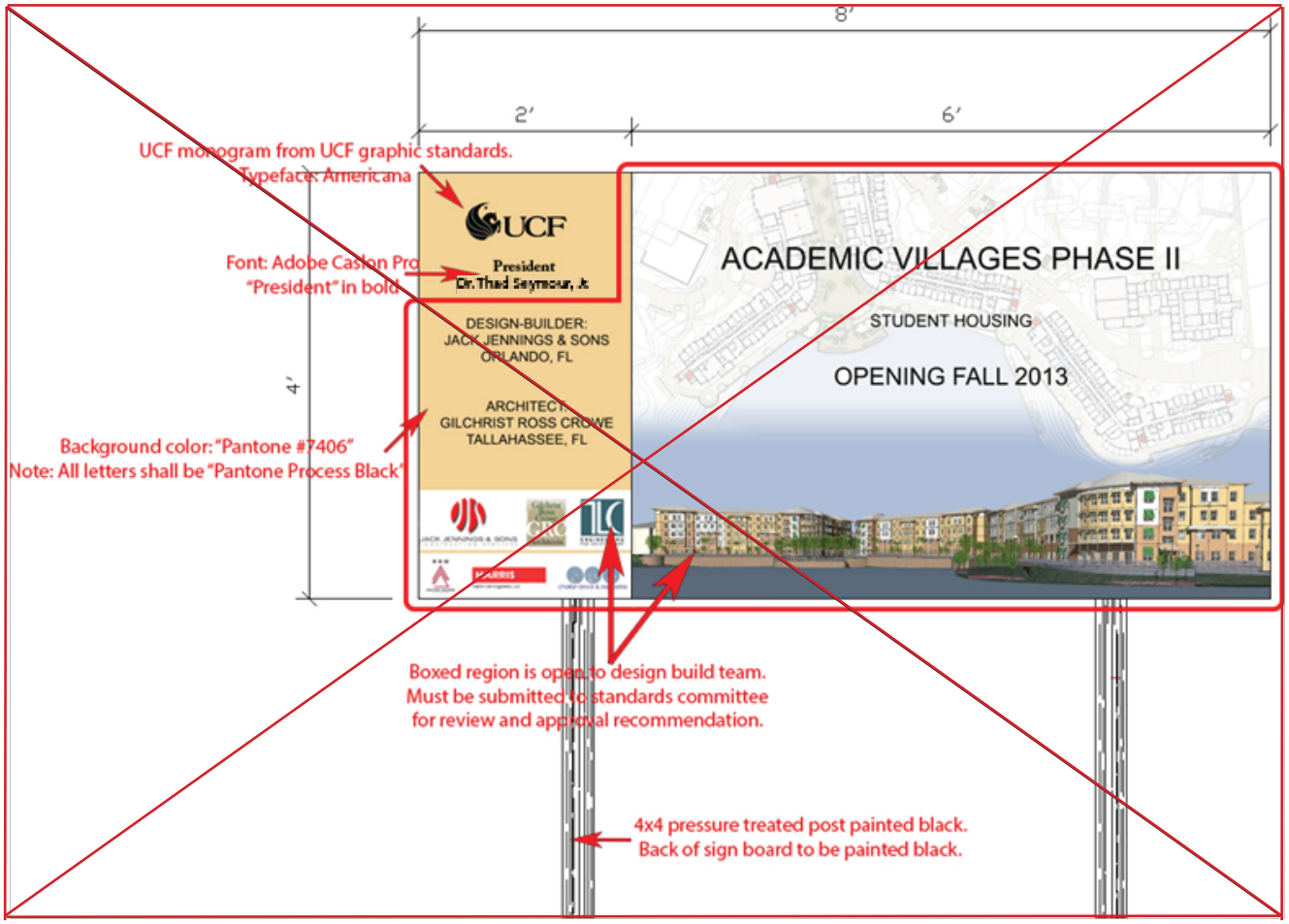

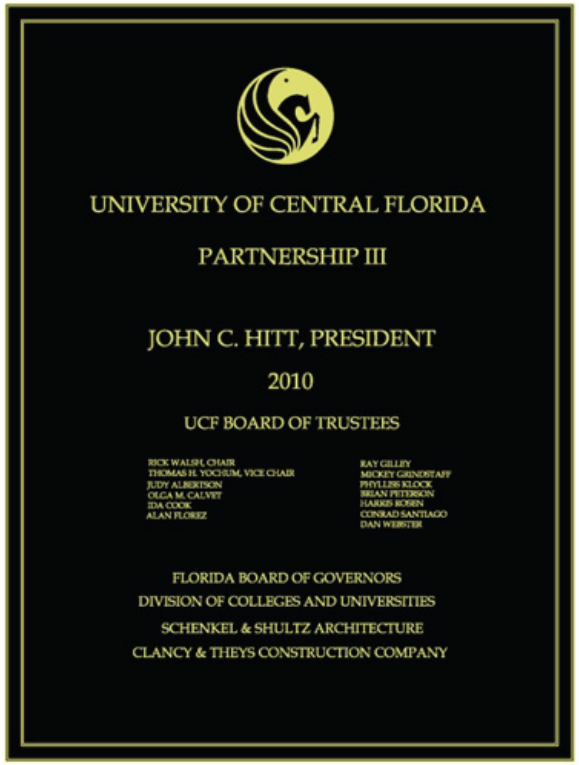

BUILDING PLAQUE

All University buildings shall have a cast bronze building plaque per the example on the left. The typical size of this plaque is 18 inches x 24 inches. The font shall be Gotham*.

The location and placement of cast metal plaques shall be graphically presented to the UCF Project Manager for review and approval. The year on the plaque shall match the year of final construction completion. The names on the plaque shall be requested from UCF constituent relations at the time the draft is prepared.

A submittal of the “draft” plaque shall be sent by the UCF Project Manager to UCF Constituent Relations and then to the Associate Vice President of Administration and Finance (University Operations) for review and approval of the names, format, and spelling prior to casting.

* Gotham font not pictured here. Updated graphic coming in a future revision.

11

Division 11 - Equipment

This section includes:

Section I - General Standards

Parking Control

Loading Docks

Foodservice and Laundry Equipment

Audio Visual Equipment

Specialty Equipment

Laboratory, Equipment, Research, and Shop Areas

Facility Maintenance and Operation Equipment

Recycling

Section II - Level-specific Standards

Section I - General Standards

These standards apply to all projects. Additional standards for individual project levels are listed in SECTION II - LEVEL SPECIFIC STANDARDS.

1. All equipment with electrical, automatic moving parts, or other potential exposure hazards shall be arranged, located, secured and or provided with suitable barriers to prevent access or tampering from unauthorized persons.
2. All outdoor equipment shall be provided with suitable barriers to prevent unauthorize access and potential exposure hazards. Barrier types and landscaping will be determined by the owner as appropriate for the area aesthetics.

Parking Control

Refer to Section D.32 for Surface Parking Marking.

Loading Docks

1. A loading dock shall be provided for buildings requiring frequent delivery of heavy or bulky items, such as books, stage sets, and special events materials.
2. Equipment installed for purposes of removing or installing building systems shall be identified in Construction Documents, and details shall include weight limits and static and dynamic load parameters. Weight test certifications shall be delivered to the UCF Project Manager.
3. **CN11-1: All buildings must be provided with grade-level vehicular access.**

Foodservice and Laundry Equipment

1. All commercial kitchens shall be designed by a commercial food service consultant.
2. All cooking equipment that produces smoke or grease-laden vapors must be vented to the exterior.
3. Large break rooms and centralized food warming areas must be provided with local exhaust.
4. Residential cooking facilities shall be exhausted to the exterior.
5. All laundry dryers shall be vented to the building exterior.

Audio Visual Equipment

Multimedia spaces, equipment, and control design will be approved through the UCF Office of Instructional Resources (OIR). Refer to the OIR website for additional Standards information related to OIR items.

Where new clocks are designed in classrooms and common areas they shall be 120V wired for primary power. Clocks that automatically update for daylight savings time are preferred.

Specialty Equipment

Unique specialty appliances, equipment, systems, and structures required for the operation of a proposed process or activity outside of state funded PO&M facility support are the responsibility of the department to maintain and/or support via funding in coordination with Facilities. Examples include but are not limited to towers, process equipment, equipment enclosures or cages, UPSs, specialty filtration, sensing and warning systems, debris collection, convenience ice and water dispensers and associated lines and filtration, and suppression.

Laboratory, Equipment, Research, and Shop Areas

Areas planned for any research, laboratory, testing, manufacturing, or shop activity that involves the use of hazardous materials and processes shall comply with this section. The term laboratory has been generically used and is intended to cover any area or equipment that has hazards



Typical Emergency Eyewash and Shower Equipment Station

associated with its routine use in a laboratory, research, or similar application. This standard shall apply to the installation of equipment into existing areas to the extent necessary to retrofit the space for safe use.

The following design basis shall apply to all laboratory or shop research spaces. Alternative means and methods will only be considered on a case-by-case basis, as recommended by a design professional's evaluation.

1. All spaces shall be designed at a minimum as NFPA 45 or 55-compliant.
2. All laboratory spaces shall be designed to contain wholly the contents needed to operate. Satellite storage and dispensing areas are not permitted as an assumed basis of design. Adjacent corridors and mechanical spaces are not available for extension of laboratory activities.
3. All features, work surfaces, and flooring shall be suitable for the processes planned in the space. At a minimum, flooring must be non-pervious, monolithic, and liquidtight, with covings or equivalent methods to ensure spills cannot seep underneath adjacent walls and cabinetry. All flooring penetrations for the area must be sealed to prevent spills from seeping to floors below. Liquidtight seals are required at room perimeters and where cabinetry that cannot be easily cleaned beneath.
4. All areas where substances that are damaging to human tissue and/or infectious agents are handled shall be equipped with a hand wash sink and emergency eyewash and shower stations. The eyewash and shower shall be a combination unit for simultaneous use, and will be located in a well-lit area, in accordance with current ANSI standards. Each unit shall be identified with a highly visible sign. The location of the unit will be coordinated to provide adequate clearances to area electrical hazards and Ground Fault Circuit Interrupter (GFCI) protection. Adjacent surfaces shall be suitably water-repellent. **CN11-2: A three (3)-inch floor drain with trap primer and integral funnel shall be provided at each emergency eyewash and shower equipment station. The adjacent floor shall be sloped to drain.**
5. Areas using free-standing gas cylinders shall be provided with racks and securing straps or chains to secure containers properly. Special ventilation shall be provided for hazardous gases. Incompatible gases shall be separated by the regulated distances. Highly flammable gases, such as hydrogen, shall be stored outside of the building.
6. Cabinetry for chemical and flammable storage shall be provided and sized for anticipated use, with no less than one separate unit for each material type planned. Cabinetry shall meet NFPA and OSHA requirements. Secondary containment is required for all liquid hazardous materials stored on the floor. The cabinet shall have venting compatible with the chemicals stored. Cabinets used to store flammable or corrosive materials shall be labeled with appropriate signage. Cabinetry built into fume hood bases is preferred. See Division 12 for additional laboratory casework requirements.
7. Prior to system design, the Engineer shall perform an evaluation of the type of contaminants being exhausted for all laboratory work areas containing chemical, biological, or similar hazards. Areas in which hazardous materials are present shall maintain a continuous airflow at an air-pressure that is negative relative to adjacent spaces and corridors at all times. Floor plans shall be arranged to maintain an overall positive air pressure for the building envelope. Design shall include means for energy conservation when laboratory workspaces are unoccupied. Details on equipment, sensors, fail safes, air changes per hour at all settings, etc. will be included in the design. All laboratory work areas with chemical, biological, or similar hazards must be provided with 100% exhausted air without recirculation. Air filtration units are not permitted.

8. All laboratory workspaces using chemicals shall be equipped with fume hoods permanently ducted to the exterior. A Class II B2 biological safety cabinet (BSC) shall be provided when working with biologicals and toxic, radioactive, flammable, corrosive, or malodorous chemicals are used.
   a. Fume hoods shall be Variable-Air-Volume (VAV) type capable of maintaining the required minimum face velocity of 100 fpm for standard fume hoods and 60 fpm for high-performance, low-volume exhaust, +/- 5% of design with the sash set at working height of 18". Non-bypass constant volume and ductless-type fume hoods are prohibited.
   b. Factory installed, permanent sash stops shall be incorporated into all new laboratory fume hoods at eighteen (18) inches from the working surface. A sash shall be provided with counterweight movement components. The front shall contain a fullview vertical sash for total visual access of the hood interior.
   c. Every vertically rising sash shall be provided with an auto sashcontroller with the following minimum features:
      i. Key pad with backlit LCD velocity and status display.
      ii. Proximity sensor to automatically close the sash if the opening is clear and no operator is detected.
      iii. Manual sash operation
      iv. Selected controller shall include key pay with push button Open/Close.
      v. BACnet integration
      vi. Under sash sensor to ensure sash does not close on obstructions.
      vii. Emergency purge option.
   d. Internal lighting and utilities connections shall be included, as needed, for the application, with consideration being given to accessible placement.
   e. Special purpose hoods shall be identified for the intended application, with visible signage such as "FOR PERCHLORIC USE ONLY" or "FOR RADIOACTIVE ISOTOPES."
   f. Fume hoods, ducted cabinets, and exhaust drops shall be tested and adjusted after installation and prior to occupancy, in coordination with the building test and balance report. The Engineer shall review the noise and vibration levels of the units and include isolation equipment as required to meet acceptable levels. Performance tests on hoods must be in accordance with the latest edition of ANSI/ASHRAE 110 Method of Testing Performance of Laboratory Fume Hoods. Testing shall be witnessed by the Owner. An inspection tag indicating all NFPA 45 parameters shall be provided.

LEVEL C RENOVATIONS

Where more than 50% of an existing laboratory is renovated or when any existing individual hood or hood services are modified, auto sash controls shall be retrofitted into the existing fume hoods to improve energy efficiency and user functionality. Exception: Auto sash retrofit is not required where it is technically infeasible for the existing hood equipment without extensive component replacement.

9. **CN11-3: Laboratory hoods and associated exhaust or supply system shall be tested and balanced again six (6) months after the date of occupancy. The report shall include adjustments made or recommended, fan curve performance efficiency, vortex behavior, and face velocity.**
10. Fume hoods - Utility service fixtures for gas, air, water, and vacuum shall be remote-controlled, with valves identified by index button. Outlets shall have serrated tips for line connections. All outlets shall be color-coded with the valve controls, and the color key must be consistent within the



Typical Mushroom-type Resettable Button



Typical Mop Sink

same work area and building, where possible. Water service shall also have an integral vacuum breaker and a turret with six inch swivel gooseneck, and shall be PVC, epoxy, or similarly coated, as required for the application.

11. All biosafety cabinets shall be National Science Foundation (NSF) -listed, UL-approved, and installed in accordance with the manufacturer's requirements. Equipment shall be clearly identified as to the type of service it provides, especially where more than one appliance is available. Biosafety cabinets shall be vented from the building if toxic, radioactive, flammable, corrosive, or malodorous chemicals are used. Biosafety Level 2 laboratories or higher that are using chemicals shall be equipped with a Class II-B2 type cabinet. Venting to external ducts shall be monitored with a flow monitoring system with both audible and visual annunciations that alert the cabinet users of loss of external ventilation. Alternatively, thimble connections or canopy mini-enclosures in cabinets shall be fitted with a ribbon streamer or equivalent attached at an edge through which air enters the device to indicate the airflow direction. Biosafety cabinets will be located so as to neutralize any interference or disruptions in airflow. They shall be located away from doors, high traffic areas, at least ten feet from autoclaves, away from HVAC vents, and not directly across from other BSCs. A distance of at least six feet between cabinets is preferred. A 12-inch minimum maintenance clearance shall be provided behind and on each side of the cabinet. When the BSC is hard-ducted or connected by thimble unit to the ventilation system, adequate space shall be provided so as not to interfere with airflow. Each BSC shall be tested, certified, and tagged before it is placed into service, after it has been repaired or relocated, or after the HVAC configuration has been changed. An NSF- certified technician shall perform this test. Ongoing testing, re-certification, and filter replacement costs are the responsibility of the department.
12. Fuel gas piping shall not be installed to bio safety cabinets. All laboratory fume hoods and biological safety cabinets shall be equipped with manufacturer-approved integral visual and audible airflow alarms. Safety alarm consoles must be factory-tested and field-verified to be within acceptable calibration limits. Additional alarms for sash position must be provided. All hoods must have signage stating: "Hood sash must be closed when not in use."
13. Local exhaust shall be provided for equipment storage and for applications involving processes with hazardous materials or materials producing excessive heat.
14. Laboratory exhaust grounded ducts shall be liquid-tight, welded, seamless, and ground with no internal projections. At a minimum, stainless steel (SS) 316 shall be used unless special exhaust conditions warrant alternative methods. Duct sprinklers are prohibited. Ductwork shall be field-tested using smoke or similar means to verify containment.
15. All laboratory spaces shall be equipped with emergency shut-off valves for vacuum, fuel, and process gases, and a shunt trip for electric service. Electrical shunt buttons and dedicated fuel gas shutoff valves shall be located adjacent to the primary exit path within each lab. Additional controls for vacuum, process gas, or other systems requiring isolation must be provided for individual labs located just outside the lab where a utility space is suitable or within the lab adjacent to a primary egress path. Vacuum, fuel, and process gas valves must be provided for individual labs located just outside the lab e.g., a ball valve behind a clear cover. A fire alarm solenoid for automatic supply shut off of fuel gas shall be provided, as well as additional shut-offs for specialty items. Emergency controls shall be provided with protective covers that do not require the use of a key or break-away components and are intended for the purpose installed. Mushroom-type resettable buttons with covers for interior electrical controls. All controls to be adequately labeled with the utility and area served.

16. All fuel gas supplies and their associated connections, piping, and fittings shall be provided with a painted yellow finish suitable for the application. Equipment located in open areas shall be installed with concrete pads and protected by yellow, rounded-top, concrete-filled pipe bollards or appropriate collision protection.

Facility Maintenance and Operation Equipment

1. CN11-4: Equipment needed to provide facilities operational support to the building will take priority in funding over general building furnishings and equipment.

2. CN11-5: Central vacuum cleaning systems are prohibited.

3. Housekeeping closets shall be a minimum of 120 sq ft on the first floor and 90 sq ft on each subsequent floor. Each room shall directly access the main corridor or common area and must be rectangular in shape, without passthrough rooms.
4. All buildings three stories or more in height shall include a central trash and recycle room. The room shall have a floor drain in the center of the room, shall be located on the first floor, and shall include a minimum 8' wide x 10' tall, insulated roll-up door, with exterior access. The room size is indicated on the RECYCLING AND TRASH EQUIPMENT TABLE on page D.11-5.
5. Each housekeeping closet and central trash recycle room shall have a flooring per D.9, wall shelving space, and a floor mop sink with mop wall rack, must be precast, with a maximum six inch front curb *(as pictured for ergonomic tipping),* hot and cold water service, and trap drains. Power must also be provided. Surface mounted water resistant splash guards shall be provided at and 1' past the fixture and sink on all adjacent wall surfaces. Reinforcementbacking shall be provided in the walls where shelving and rack is designated.
6. All building shall be provided with a minimum dedicated 6'x6' floor space for universal waste collection and maintenance with sealed concrete floor located on the first floor. All buildings three stories or more in height shall also include a additional maintenance workspace with a flooring per D.9, located on the first floor, and start at a minimum of 120 sq ft.
7. First floor housekeeping and maintenance rooms shall have power and data connections. Power shall include two dedicated, 20-amp circuits.
8. A Traka key-type security box and Kronos time clock compatible with systems used by UCF will require data connections and power at a single first floor location. Consult with the UCF Project Manager to determine if these are to be Contractor- or Owner-furnished.
9. Metal storage sheds and similar structures are not permitted on the UCF campus.

RECYCLING AND TRASH EQUIPMENT

First Floor

Equipment Description	Qty.	Dimensions	Space Required (sq. inches)
Janitor's Cart	1	24" x 54"	1296
Locker	1	24" x 20"	480
Wet & Dry Vacuum	1	27" x 31"	837
Blower	1	24" x 24"	576
Desk	1	24" x 30"	720
Utility Sink	1	20" x 24"	480
Mop Bucket	1	22" x 22"	484
Buffer	1	26" x 22"	572
Shampoo Extractor	1	36" x 36"	1296
Floor Burnisher	1	36" x 27"	972
Vacuum Cleaner	1	24" x 20"	480
Trash Barrel	1	36" x 36"	1296
Boxes of Paper Towels	1	16" x 29"	464
Boxes of Toilet Paper	1	16" x 29"	464
Trash Toter	2	39" x 36"	2808
Circulation Area	1	60" x 60"	3600
	Total (sq. in.)		**16,825**
	Total (sq. ft.)		**117**

Other Floors

Equipment Description	Qty.	Dimensions	Space Required (sq. inches)
Janitor's Cart	1	24" x 54"	1296
Locker	1	24" x 20"	480
Utility Sink	1	20" x 24"	480
Mop Bucket	1	22" x 22"	484
Buffer	1	26" x 22"	572
Vacuum Cleaner	1	24" x 20"	480
Trash Barrel	1	36" x 36"	1296
Boxes of Paper Towels	1	16" x 29"	464
Boxes of Toilet Paper	1	16" x 29"	464
Trash Toter	2	39" x 36"	2808
Circulation Area	1	60" x 60"	3600
		Total (sq. in.)	**12,424**
		Total (sq. ft.)	**87**

HOUSEKEEPING CLOSET SPACE REQUIREMENTS

Primary Building Function	Container Type	Qty.	Dimensions	Space Required (sq. in.)
Administrative / Office	Trash Toter	7	39” x 36”	9828
	Recycle Material Toter	5	39” x 36”	7020
			Total (sq. in.)	**16,848**
			Total (sq. ft.)	**117**
Offices / Classrooms	Trash Toter	7	39” x 36”	9828
	Recycle Material Toter	5	39” x 36”	7020
			Total (sq. in.)	**16,848**
			Total (sq. ft.)	**117**
Science Labs / Offices	Trash Toter	5	39” x 36”	7020
	Recycle Material Toter	5	39” x 36”	7020
			Total (sq. in.)	**14,040**
			Total (sq. ft.)	**97.5**
Computer Labs / Offices	Trash Toter	5	39” x 36”	7020
	Recycle Material Toter	15	39” x 36”	21060
			Total (sq. in.)	**28,080**
			Total (sq. ft.)	**195**

Recycling

1. **CN11-6: A two (2) feet by five (5) feet setback shall be provided to accommodate Owner-provided recycling bins in a public area corridor of each floor.**
2. A visually-screened area outside of the building near trash dumpsters shall be provided for trash and recycling toters.

References:

NFPA 101 Life Safety Code Includes requirements for annual door opening inspections http://www.nfpa.org/

Office of Instructional Resources Crestron DigitalMedia Room Designs http://oir.ucf.edu/crestron-digitalmedia-room-designs/

UCF Facilities Operations Standard Operating Procedure - H01 for Housekeeping Closet Set http://fo.ucf.edu/sites/default/files/pictures/SOP-H01.pdf

Section II - Level-specific Standards

LEVEL A - LABORATORIES

Facility Maintenance and Operation Equipment

Requirements for recycling and trash equipment shall not be addressed on a case-by-case basis.

Recycling

A 200 square foot recycling room must be provided. Room must open directly onto loading dock or service area of building. The room must have at least one interior door to circulation which is large enough to accommodate recycling toters. The room must have flooring per D.9 and a floor drain in the center of the room.

LEVEL B - CLASSROOMS, OFFICES, CONFERENCE ROOMS, AND OTHER ACADEMIC SPACES

Facility Maintenance and Operation Equipment

Requirements for recycling and trash equipment shall not be addressed on a case-by-case basis.

Recycling

A 200 square foot recycling room must be provided. Room must open directly onto loading dock or service area of building. The room must have at least one interior door to circulation which is large enough to accommodate recycling toters. The room must have flooring per D.9 and a floor drain in the center of the room.

LEVEL C - RENOVATIONS

Facility Maintenance and Operation Equipment

Renovated buildings are not required to have recessed corridor recycling areas; however, recycling bin areas shall be designated and indicated on floor plans.

Recycling

A recycling room is not required.

LEVEL D - HOUSING

Facility Maintenance and Operation Equipment

Housing requirements for recycling and trash equipment are to be addressed on a case-by-case basis.

Recycling

A recycling room is not required.

LEVEL E - LEASED PROPERTY (FIVE YEAR LEASES OR LESS)

Facility Maintenance and Operation Equipment

Common area recycling and trash area requirements are reviewed on a case-by-case basis, dependent on tenant use and operations.

Recycling

A recycling room is not required.

THIS PAGE INTENTIONALLY LEFT BLANK

12

Division 12 - Furnishings

This section includes:

Section I - General Standards

Window Treatments

Laboratory Casework

Furniture

Fixed Seating

Section II - Level-specific Standards

Section I - General Standards

These standards apply to all projects. Additional standards for individual project levels are listed in SECTION II - LEVEL SPECIFIC STANDARDS.

Window Treatments

Windows in conference rooms, classrooms, or auditoriums shall include coverings or treatments that will restrict daylight from visually obscuring projection screens at any time of the day during the year. Mini-blinds are prohibited.

Laboratory Casework

Refer to Section D.6 for Custom Millwork.

1. Fixed casework shall be included in the construction contract.
2. **CN12-1: Bases for all casework, hoods, or similar border areas at fixed laboratory furnishings shall be feet mounted for cleaning underneath or equipped with a liquid tight seal at the floor to prevent spills from seeping under adjacent surfaces.**
3. Modular casework shall be produced by a laboratory casework manufacturer that is a member of the Scientific Equipment and Furniture Association (SEFA).
4. Laboratory countertops shall be solid epoxy or stainless steel construction. Sinks shall be integrally cast or under mount.
5. **CN12-2: Furnishings and equipment placed in close proximity to wet areas (sinks, safety showers, etc.) shall be water-resistant.**
6. Utilities within laboratory casework shall be easily accessible.
7. Shelving used for chemicals shall be acid-resistant.
8. Particle board is prohibited.

Furniture

1. On new buildings, furniture (such as desks, chairs, filing cabinets, etc.) is purchased from the Owner's furniture and equipment funds.
2. Materials and products shall be durable, stain-resistant, and low-maintenance.
3. The minimum weight requirement for furniture testing is 250 lbs.
4. Furnishings and equipment samples shall be provided by the Architect, Interior Designer, or furniture vendor and approved by the UCF Project Manager.
5. Where available, furnishings shall be selected with modular assembly to facilitate repairs on operable and heavily used components like flip seats and arm rests.

Fixed Seating

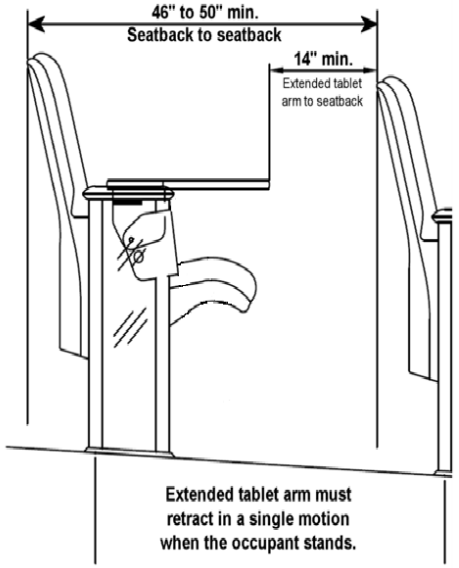

1. Lecture hall and auditorium seating shall be spaced at a minimum as depicted above. Seats shall be only 22" or 23" center to center.
2. Fixed furnishings and seating shall be included in the construction contract.
3. Seating in classrooms shall comply with all safety and performance standards outlined in ANSI/BIFMA X6.1 Standard for Educational Seating.

References:

Business Institutional Furniture Manufacturers Association (BIFMA) Product Safety and Performance Standards and Guidelines http://www.bifma.org/?page=standardsoverview

Scientific Equipment and Furniture Association (SEFA) SEFA Recommended Practices 3, 7, and 8 *http://wwwsefalabs.com/*

Section II - Level-specific Standards

LEVEL A - LABORATORIES

Fixed Seating

Seating width and configuration requirements may not be reduced to code-minimum in order to maintain seating capacity.

LEVEL B - CLASSROOMS, OFFICES, CONFERENCE ROOMS, AND OTHER ACADEMIC SPACES

Fixed Seating

Seating width and configuration requirements may not be reduced to code-minimum in order to maintain seating capacity.

LEVEL C - RENOVATIONS

Fixed Seating

Seating width and configuration requirements may be reduced to code-minimum in order to maintain seating capacity.

LEVEL D - HOUSING

Fixed Seating

Seating width and configuration requirements may not be reduced to code-minimum in order to maintain seating capacity.

LEVEL E - LEASED PROPERTY (FIVE YEAR LEASES OR LESS)

Fixed Seating

Seating width and configuration requirements may not be reduced to code-minimum in order to maintain seating capacity.

THIS PAGE INTENTIONALLY LEFT BLANK

14

Division 14 - Conveying Equipment

This section includes:

Elevators

- **Non-Proprietary Equipment and Controls**
- **Elevator Equipment Rooms**
- **Elevator Cabs**
- **Operating Features**
- **Elevator Hoistways**
- **Electrical Requirements**
- **Training**
- **Certificates**
- **Warranty and Service**

Elevators

1. All elevator specifications shall be reviewed and accepted by UCF Facilities Operations prior to inclusion in the Construction Documents. All equipment and products shall be non-proprietary in type.
2. For buildings where equipment must be moved from floor to floor, one elevator shall have a minimum inside cab wall length of seven feet in length.
3. **CN14-1: New installations shall be gearless traction elevators driven by AC electric motors.**
4. As-built submittals for both new and renovated elevators and lifts shall include two sets of laminated as-built wiring diagrams, a block diagram, and diagnostic data, along with complete service manuals; one diagnostic test device; a reference guide; fault codes; and service tools, when applicable. All special tools needed to perform the proper maintenance shall be provided.

NON-PROPRIETARY EQUIPMENT AND CONTROLS

1. The equipment shall have on-site capability to diagnose the solid-state controls faults of all components, parts, circuit boards, etc.. If the equipment requires a separate, detachable device or tool for fault diagnosis or adjustments, that device or tool shall be incorporated as a permanent part of the equipment and provided to UCF as a part of the installation.
2. The device or tool will become property of the UCF and shall be provided with complete troubleshooting guides. All technical information, including software, passwords, addresses, etc., required to adjust and perform completely the tests required by the governing authority shall be provided. The device or tool shall be of the perpetual type (never needing to be recharged or reprogrammed).
3. TThe equipment manufacturer shall agree to sell all parts, printed circuit boards, programmed chips, transducers, controller power supplies, etc., to any maintenance contractor providing services to UCF.
4. Spare parts shall be made available for immediate sale for replacement or stock within twenty-four hours of notice.
5. Exchange-only provisions to restrict parts purchase are prohibited.

ELEVATOR EQUIPMENT ROOMS

1. Elevators will have dedicated elevator equipment rooms located directly off a main corridor or common area.
2. Elevator equipment room, see D.9.

ELEVATOR CABS

1. Support rails on three walls of the elevator cab are required.
2. All exposed screws inside the cab shall be tamper-proof.
3. Buttons shall be LED backlit, vandal-proof, and stainless steel.
4. All cab lighting fixtures shall be LED.
5. Elevators shall be equipped with automatic leveling devices.
6. Center parting doors or two-speed doors are required. Elevator doors shall have infrared safety strips. The use of photo eyes is prohibited.
7. Cab interiors, walls, doors, rails, and frames shall have a stainless steel finish. Flooring shall be rubberized and nonporous. Tile shall only be used for passenger elevators.
8. All safety edges furnished in connection with the car doors shall be metal or extruded vinyl plastic

OPERATING FEATURES

1. Top and side emergency exits shall have contacts that will stop the cab and ring a bell.
2. Side emergency exits shall be key-locked from inside the cab and will not open from outside the cab.
3. The emergency stop switch shall be connected to an alarm bell, including a bell mounted under the platform and a bell located at the main floor lobby.

4. The cab control panel shall include no buttons other than the alarm, open door (and hold open), close door, and floor buttons. Any other switches required for operation of the elevator, including light and fan switches, shall be key-operated or contained in a separate cabinet having a locked door.
5. In addition to the load-weighing device, the system will communicate weight overload through a ringing bell and a light illuminated when the cab is 120% above weight capacity.
6. The Fireman's recall feature shall be compatible with the building's fire alarm system.
7. Elevators in the UCF Health Science Campus at Lake Nona facilities shall have an emergency intercom with call button, mounted in accordance with Florida Accessibility Code requirements, connected to the Centrex/UPD Monitoring Center, in lieu of an emergency phone.
8. Each passenger elevator shall have emergency power.

ELEVATOR HOISTWAYS

1. Conduit or plastic pipe shall not be installed in the pit, hoistway, or machine room. Only metal sump pump discharge lines are allowed in pits and hoistways.
2. Elevator pits 4'-0" or deeper shall have a metal ladder, permanently installed, extending to at least 30" above the access floor and have a rung at the top for a hand grip.
3. A moisture-proof light shall be provided in each pit, with a light switch located so that it is accessible from the pit entrance and adjacent to the pit stop switch. Two sealed, four-foot fluorescent bulb, watertight fixtures shall be installed in all elevator pits, one fixture per side.
4. Beams, floor slabs, or other building construction shall not project more than 2" inside the general line of the hoist-way unless the topside of the projection is beveled at an angle of not less than 75-degrees.
5. Hoistways of elevators serving more than three floors shall be vented to outside air to prevent accumulation of smoke or gases. The area of the vents shall not be less than three and one-half percent (3½%) of the area of the hoistway, nor less than three square feet for each elevator, whichever is greater. Vents and frames shall be made of noncombustible material. All vent openings shall reject a ball two inches in diameter and may be covered with a screen.
6. All nails, snap ties, form straps, and wood shall be removed from the hoistway, machine room walls, and ceiling.

ELECTRICAL REQUIREMENTS

1. Main line switches shall be of the fused type and must provide means of locking the switch in the open position. Fuses in the main line disconnect switch must be "Class K5" or "Class R". Fuses shall be properly sized for the load and rating of the disconnect switch.
2. Main line feeder wires shall be phase-identified in the main line switch and at the terminals of the controllers.
3. Buildings having emergency power generators shall have generators operable at the time of initial inspection by the state elevator inspector.
4. All elevator equipment shall include solid-state power control systems.

TRAINING

The Contractor shall provide one four-hour training session on the proper operation and maintenance of the elevator to University maintenance personnel.

CERTIFICATES

CN14-2: Certificates must be mounted in the elevator cab before the building can be occupied.

WARRANTY AND SERVICE

1. Warranty and service shall be for two years, starting at the date of Substantial Completion, and must comply with the Facilities Operations preventive maintenance program.
2. A fireman elevator recall key and elevator key shall be provided. If elevator room is located on the roof, two sets of keys shall be provided.

References:

ANSI/American Society of Mechanical Engineers Safety Code for Elevators A17.1 Safety Code for Elevators and Escalators *http://www.asme.org*

NFPA 72: National Fire Alarm and Signaling Code
http://www.nfpa.org/

NFPA 101 Life Safety Code *http://www.nfpa.org/*

THIS PAGE INTENTIONALLY LEFT BLANK

21

Division 21 - Fire Suppression

This section includes:

Introduction

Fire Suppression

Clean-Agent and Similar Specialty Fire Extinguishing Systems

Introduction

New and renovated buildings shall be provided with automatic sprinklers and fire standpipe systems, in accordance with applicable NFPA standards and FM Global requirements. The installation of all sprinklers shall only be executed by a licensed sprinkler Contractor.

Fire Suppression

1. The Fire Protection Engineer will design, at a minimum, the primary branch line distribution and indicate this scope on the bid documents.
2. Installation of any system does not guarantee a continued maintenance service contract with the installing Contractor. All system components, pumps, controls, etc., shall be non-proprietary in that replacement parts are readily obtainable and can be serviced by a third-party, licensed vendor who is Owner-selected by separate bid process. Such service shall not have an effect on warranties.
3. Where special fire protection, such as pre-action sprinkler systems, are provided at user-departmental request for equipment protection, the department shall be responsible for extra costs associated with upkeep of the system above normal building sprinkler maintenance. The department shall also designate appropriate personnel for response to special system alarms and post emergency contact information by the area's main entrance.
4. **CN21-1: In determining the adequacy of the existing water source to meet the required fire flow, it is the responsibility of the system designer to perform the necessary site flow tests, in coordination with the UCF Project Manager and witnessed by the Owner. Timing shall be coordinated at peak demand to reflect typical conditions and include a suitable factor of safety using historic data.**
5. Each sprinkler or standpipe system shall be dedicated to the building it serves. Separate buildings only joined by a breezeway-type canopy shall have separate systems. Design shall allow the entire building to be operated as one system and monitored by one fire alarm. Where building additions are planned, provisions shall be made to unify the system upon completion of all phases.
6. All threads shall be in accordance with local responding fire department specifications.
7. The system main riser shall be located in a mechanical space, stairwell, or other maintenance-accessible area, preferably with a door to the building exterior. Control valves, drain valves, and components requiring access for routine testing, maintenance, and inspection shall be in dedicated closets or a location in common areas. Laboratories, office, storage, restrooms, and instructional or similar spaces used by building occupants shall not be used for equipment access. An inspector's test valve (with sight glass where needed) and drain to the exterior of the building shall be provided at a remote point in each system to facilitate air bleed-off and verification of water flow throughout.
8. Systems shall have control valves to accommodate individual isolation for each floor of the building, with additional valves for isolation of special areas as determined by the Owner. Fire alarm-monitored flow switches shall, at a minimum, identify flow by floor, with additional switches as needed for special area zones.
9. All exposed wet pipe including roof hydrants, FDC's, and backflow preventers where dedicated to fire protection use, shall be provided with means for freeze protection. Insulation shall be jacketed finish. See example photo of insulation and ball drip on next page.
10. Antifreeze-type systems are prohibited.
11. All pre-action, dry, or similar special systems controls shall have a dedicated closet-type space located off the main corridor, with adequate access at all times, not



Insulation shall be jacketed finish.

in housekeeping rooms or user storage spaces. Wall surfaces adjacent to special system controls and drains shall be water-resistant.

12. Where roof standpipe flow testing requires a fire department pumper truck, testing shall be included in the Contractor's Scope of Work.
13. Fire pump rooms shall be located on an exterior wall with a door to the outside. The room shall be dedicated to fire protection equipment, without penetrations for non-related services. Ventilation and freeze protection is required. The fire pump controller shall be located directly adjacent to the exterior room door for direct access to the emergency disconnect. Fire pumps (where installed) shall be electric drive, with a remote annunciator capable of monitoring all points required by NFPA 20. They will be located in proximity to the fire alarm control panels, adjacent to a Fire Department-accessible exit, and in a common area of the building. The pumps shall be tested in accordance with NFPA 20 and witnessed by the Authority Having Jurisdiction. Backup fire alarm systems monitoring the pump controller dry contacts shall be provided where possible. Monitoring may also be achieved utilizing the building fire alarm system where available. Trouble and supervisory conditions with the pump must be reflected remotely.
14. The installing Contractor shall have a minimum of five years work experience installing systems with similar size and components. Where specialty items are used, additional certificates showing manufacturer training are required.
15. All materials shall be manufacturer's standard, new equipment, free from defects, and listed.
16. All new and renovated piping for fire protection systems shall be rigid metal pipe. Non-metallic tubing and "flex"-type connections are prohibited except for sprinkler head supply lines which may be flexible braided metal hose with properly installed anchoring brackets.
17. Butterfly valves are not permitted in any portion of the fire suppression system, under or above ground. All lines two inches or larger shall have open stem and yolk (OS&Y) -type valves, with tamper switches (and ~~or~~ lock as outlined herein) and flow switches.
18. Any fire suppression system shall have dedicated, metered, backflow preventers with freeze protection.
19. All ~~indoor~~ system control valves, shall be tamper monitored by the building fire alarm system. Valves (including backflow and PIV) located outside or in common building areas shall also be individually chained and locked with a University standard fire system padlock where required by the AHJ.
20. An approved means of access shall be provided to all controls, cabinets, equipment, valves, and similar serviceable items hidden above ceillings and in concealed spaces. The item shall be shall be identified by permanently applied printed labels at the point of access with letters not less than 0.5" in height where required by code and reasonably legible from adjacent grade access. Verify style of label preferred with the project manager for aesthetic applications.
21. All exposed fire suppression piping in finished areas shall be specified with:

    - a finish consistent with the area, including painted risers in stairwells
    - chrome finish on the full FDC and ring
    - red paint on the backflow preventer and PIV
    - concrete pads for yard equipment with bollards

22. The test header's finish should match the FDC or building wall as appropriate for the location.
23. All gauges shall be new and permanently labeled with the date of installation.

24. Automatic sprinkler heads shall be standard, automatic closed type. Temperature ratings of fusible links shall be in accordance with NFPA 13 unless a special application is requested.

    Sprinkler heads shall be specified and installed with a date of manufacture not more than one year prior to the date of installation.

    Ceiling applications shall have semi-recessed pendent sprinkler heads. Brass upright or sidewall sprinkler heads shall be considered in other applications. Sprinkler heads shall be located in the center of the tile and the center of the area of coverage where possible. Renovated spaces shall adjust sprinkler head locations for optimal coverage protection.

    All ceiling-mounted projection screens where the distance off the adjacent wall exceeds eight (8) inches, shall have sprinkler head coverage behind the screen.

    Using sprinkler system piping for electrical grounding is prohibited.

25. To obtain a UL Master Label for lightning protection, the lightning protection shall be bonded to the fire line.

26. **CN21-2: All system drains and test connections shall be hard-piped to a termination point outside of the building at grade, away from public view or access ways, and arranged to avoid damaging landscaping.** Special system drains shall be sized to allow for system testing and resetting without additional attachments or causing area flooding.

27. The Contractor shall provide the Owner with additional sprinkler heads and escutcheons totaling no less than two of each type or five percent of the installation, whichever is larger, in addition to the NFPA spare cabinet stock. Where concealed heads are used, no less than ten cover plates of each color type shall be provided. A minimum of one spare new gauge of each size and type shall be provided. A spare cabinet with wrenches shall be placed at the main riser. Where a remote mechanical area is preferred for security, all risers shall have signage indicating the location of stock.

28. All components shall be provided with labeling, including but not limited to: riser room, control valve, inspectors test, and drains. Where controls are hidden, additional labeling shall be provided on the closest door, grid, access panel, etc. The FDC and exterior control valves shall be identified with the building number of the facility served. Colors shall be coordinated with the owner.

29. For areas that have special system coverage, such as pre-action or dry systems, all entrances to special protected areas shall be identified with UCF Standard style signage to indicate, “Room XXX: Pre-action Protected Area (Controls Are Located In Room YYY).” Corresponding separate rooms housing controls for special systems shall be provided with signage to indicate “Room YYY: Contains Controls for Pre-action Protected Area, Room XXX.”

30. Training sessions shall be provided by the qualified installers for each special system installation and others where requested by the Owner. A minimum of three (3) training sessions (one for each shift) will be held. The Trainer shall complete the UCF standard training form available on the UCF EH&S website. Additional guides and materials shall be provided as needed. A reproducible training presentation format shall be recorded and provided.

31. Detailed shop drawings and calculations shall be submitted to the State Fire Marshal for approval and the approved set shall be available prior to inspection. The State Fire Marshal or his designated representative shall witness all final acceptance hydrostatic tests. All new fire protection piping shall be hydrostatically tested, as required per NFPA 13 and 24, and these Standards.

32. The installing Contractor shall pretest all installations, have the system at the minimum 200 psi (or greater as required by code), and be ready at the test pressure for

SAMPLE FIRE PROTECTION SIGNAGE

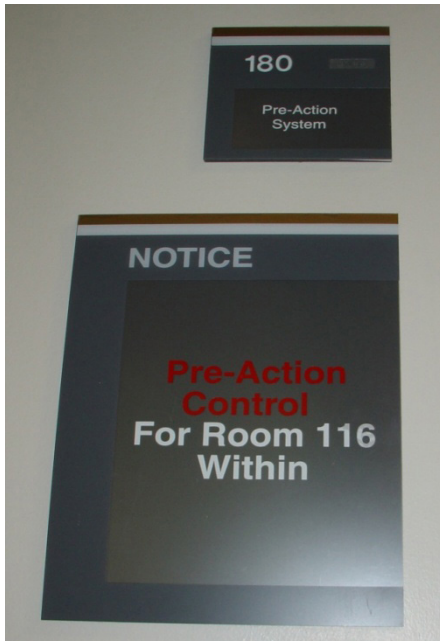





the inspector at the scheduled inspection time. The test shall run for a minimum of two hours. All required testing and certification forms and tags shall be completely filled out by the responsible parties upon test completion.

33. Where portions of systems shall not be visible at final testing, a partial hydrostatic test may be requested prior to their enclosure to accommodate the construction schedule. Scheduling of partial hydrostatic tests shall be at the Fire Marshal's discretion. For final acceptance, the entire system shall be hydrostatically tested, regardless of intermittent sectional tests.
34. For renovations and additions where a separate room, area, or zone with existing coverage has been substantially reworked, the area shall be isolated and pressure tested at 200 PSI for two hours. Where isolated by an installed blank, upon reconnection to the system, the remaining last joint and contiguous piping shall then be tested at fifty psi above normal static pressure for two hours. Where only minor rework (as determined by the Owner) is done in an area, it shall be tested at 50 PSI above working pressure for two hours.
35. Prior to final acceptance, the Owner shall be provided with an accurate, reproducible "as-built" systems package in both electronic and hardcopy forms including complete NFPA test papers itemizing all head types, manufacture date, and counts. Drawings shall be compatible with AutoCAD and contain conduit layout and wiring diagrams including wire color code and tag number. Submittals shall include a minimum of two hard copies of the composite "Operation and Shop Maintenance Manual," including a digital media (disk, USB drive, or CD) copy of the program for each system or facility.

Clean-Agent and Similar Specialty Fire Extinguishing Systems

1. Where Clean Agent (CA) and Early Detection (ED) and similar type specialty systems are chosen for optional equipment protection, they shall be designed and installed in full compliance with all sections of these Standards, the latest adopted editions of the applicable codes and standards, including but not limited to NFPA 72 and 70, and manufacturer recommendations.
2. **CN21-3: Doors exiting clean agent-protected areas shall have vision panels, swing in the direction of egress, and include panic hardware.** They shall be recessed so they do not project out into adjacent pedestrian paths.
3. The design shall also consider additional compliance with the NEC and NFPA 75 for Information Technology Equipment.
4. The installation of a CA system does not substitute for building fire sprinkler systems, but pre-action sprinklers may be used in lieu of wet pipe.
5. The system design shall outline the complete system specific to the agent and manufacturer models to be installed, with defined agent concentrations to cover Class A, B, and C fires, without substitution. It shall clearly detail the intended protected area with volumetric measurements, and identify plenum spaces in drawings, and protection status.
6. For the specified system, all materials, equipment, accessories, and components shall be supplied by one manufacturer of established reputation and experience who shall have produced similar apparatus for a period of at least five years and who shall be able to refer to similar installation rendering satisfactory service. Consideration shall be given to the availability of area qualified vendors (installers). They shall be a direct sales division of, or the authorized and designated distributor for the manufacturer, shall be able to provide support services in a timely manner, respond to emergency calls within two hours, and provide non-stock parts for repair within twenty-four (24) hours.
7. Agent tanks shall be capable of being refilled or replaced within thirty (30) days.
8. Departments requesting specialty type suppression

systems such as pre-action, CA and ED Systems shall be advised that all costs associated with these systems such as, but not limited to, routine maintenance, recertification, refilling, upgrade, etc., are the responsibility of the department. The department shall also establish local departmental personnel for general system management and response to all alarms and signals originating from these systems. This shall also include performance of routine inspections as often as daily, as outlined by the manufacturer; response and oversight of room ventilation; HVAC and equipment start-up after discharge; and coordination with Planning, Design and Construction when needed. Required maintenance by a certified vendor and any interface with the building fire alarm system shall be provided in coordination with PDC, at the department's cost. CA and ED vendors are not authorized for building fire alarm system access.

Knight Notes

**A minimum of three, complete, original manufacturer's design, installation, and operation and maintenance manuals, with additional copies as needed, shall be provided to complete each set for review. Plans shall be held until the University Building Code office receives the original manuals.*

9. Installation of any system in no way implies continued maintenance service contracts with the installing Contractor. All system components, pumps, controls, etc., shall be non-proprietary in that replacement parts are readily obtainable and can be serviced by a third party, licensed vendor that is Owner-selected by separate bid process. Such service shall not have an effect on warranties.
10. **CN21-4: The system specification shall require the vendor to provide a maximum price for the services below to be guaranteed for a minimum of five years.** The price quote is provided to UCF with option to be exercised for the benefit of UCF. At a minimum, the quote shall include the following:
    - An all-inclusive fee for semi-annual and annual inspection services per system, including all typical tags seals, and labor as needed to meet manufacturer and NFPA guidelines.
    - Standard fee per system for manufacturer-required one-, two-, and five-year or similar maintenance, with detail of services provided.
    - Standard price per pound agent per refill.
    - Standard hydrostatic test per tank, including removal and return.
    - Standard service fee per refill, to include all labor, accessories, and system testing to place it back into certified service, assuming no damage to the system components from normal discharge.
    - Standard labor-hour for response calls to diagnose system troubles. (Provide detail for hourly rate types.)
    - Standard price per requested minimum one (1) hour training session on site for system operation and to review Owner-required maintenance.
11. **CN21-5: Design shall include a contingency plan for ventilation of the protected area and restarting of HVAC after discharge.**
12. A minimum of three sets of complete plans, sequence of events, shop drawings, submittals, calculations, manufacturers manuals*, and recommended maintenance schedule shall be provided for review to the UCF Building Code Office. Additional sets shall be available if requested.
13. A built-in exhaust system is required.
14. Suitable access, storage, operational sequence, and identification for all system equipment shall be provided. Piping materials used in all applications shall be specified.
15. Design shall specifically address maintaining fixed barriers where lay-in type ceilings are installed, to minimize added debris from concealed spaces upon discharge. Where the space requires access, identifiable means of entry or operable restraints shall be provided. Ceiling grids where tiles are secured shall be labeled.
16. Tank securing detail and assembly for each tank location shall be provided.
17. Additional requirements, spare parts, testing, and inspections, as outlined in other Divisions of this Standard, shall apply for all components of the system. All system components shall be in dedicated, identified raceways

and cabinets with Class A wiring. Where interconnection is required for monitoring by the building-wide fire alarm system, final tie-ins to that system shall be by approved Contractors, as outlined in the Fire Alarm Section of this Standard. For a minimum one-year warranty period, the installing Contractor shall be responsible for required annual and semi-annual testing, maintenance, and log. Access shall be coordinated with the department representative and Facilities Operations.

18. The installing Contractor shall have a minimum of five years' work experience on the designed system of a similar size and installed components. Where specialty items are used, additional certificates showing manufacturer training are required.
19. **CN21-6: All piping shall be thoroughly cleaned, reamed, blown clear, and swabbed with suitable solvents to remove burrs, mill varnishes, and cutting oils before assembly. Prior to hanging the pipe, approval by the UCF Project Manager is required.** Do not install plastic piping exposed within plenum areas; aesthetics shall be planned accordingly. Reducers shall be installed after fittings.
20. Where victaulic fittings are used, cut sheets for gaskets that are Nationally Recognized Testing Laboratory (NRTL)-listed for the materials and pressures present shall be provided.
21. An abort switch shall be located by all major exits and for others as required for complicated layouts. A phone shall be provided in direct proximity to each abort switch. A manual pull shall override the abort switch.
22. Manual pulls shall be enclosed in a see-through, tamperresistant plastic cover and shall be identified in such a way as to be obviously different from building alarm system devices. Small text alone is not sufficient.
23. The system shall include a supervised disconnect switch. The switch shall not be solely software-driven but shall interrupt the releasing circuit.
24. Control panels shall be located by room exit doors and shall provide remote annunciation outside the protected area when possible.
25. Appliances, detectors, and devices shall be dedicated to the system served. Alarm system features shall be specified in accordance with the Alarm Section of this standard. The building's main fire alarm panel shall monitor the systems for status as deemed appropriate by the Engineer of record, the department, and the Owner. Where the building system has the capability to indicate full descriptions, Clean Agent alarms shall be fully identified and shall be able to be transmitted to remote monitoring facilities. Specify interlocked and cross-zoned sequences, as appropriate, for the level of protection desired.
26. Where areas are also provided with pre-action sprinklers, separate dedicated initiation devices shall be installed. Identification methods to differentiate system components shall be provided.
27. Photoelectric-type devices in subfloor areas shall be provided where smoke detection is requested, to prevent false alarms. The smoke detector chamber shall be installed at the top of the subfloor.
28. **CN21-7: Agent tanks shall be new and dated within six months of system acceptance.** Tanks shall be located and maintained accessible for routine access, semiannual weighing, and scheduled removal. The tank shall be located by an area access door or main pathway.
29. Liquid level indicators for agent tanks shall be provided when available for the specified manufacturer.
30. All entrances to protected areas shall be identified with UCF Standard-style signage to indicate, "Room ### CLEAN AGENT Protected Area Within Controls Located at Room ###." Pre-action sprinklers shall be indicated where applicable. Separate rooms housing controls for systems shall be provided with signage as, "Room ### Controls for Clean Agent for Area ### Located Within." (See examples on Page D.21-4.) The department shall post additional emergency contact information for all areas.

31. Training sessions shall be provided by the qualified installers for each special system installation and others where requested by the Owner. A minimum of three (3) training sessions (one for each shift) shall be made available to department representatives. The Trainer shall complete the UCF standard training form (available on the EH&S website). Additional guides and materials shall be provided as needed. A reproducible training presentation format shall be recorded and provided.

32. A logbook and an appropriately sized wall cabinet shall be provided by the primary panel for the CA and ED systems.

    Miniature system locator maps shall be provided in the logbook(s) and shall be professionally framed and mounted at each control panel and annunciator. Additional maps and updates shall be provided for the building-wide fire alarm log, and the maps shall reflect these specialized areas of coverage.

    A copy of the panel software program and electronic PDF copies of all locator maps shall be provided to the building code office prior to CO.

    Installation shall be tested and inspected in coordination with the Office of the State Fire Marshal. Checklists are available for inspection guidance. The designated representative shall witness all tests, including but not limited to pressure, flow, and pneumatic piping.

References:

Florida Statutes Chapter 633 Fire Prevention and Control *http://www.flsenate.gov/Laws/Statutes/2013/Chapter633/All*

FM Global Property Loss Data Sheets *http://www.fmglobal.com*

NFPA 13 Standard for the Installation of Sprinkler Systems *http://www.nfpa.org/*

NFPA 25 Standard for the Inspection, Testing, and Maintenance of Water-Based Fire Protection Systems *http://www.nfpa.org/*

NFPA 70 National Electric Code *http://www.nfpa.org/*

NFPA 72 National Fire Alarm and Signaling Code *http://www.nfpa.org/*

NFPA 75 Standard for the Fire Protection of Information Technology Equipment *http://www.nfpa.org/*

NFPA 101 Life Safety Code *http://www.nfpa.org/*

22

Division 22 - Plumbing

This section includes:

Section I - General Standards

Commissioning of Plumbing

Plumbing Piping

Facility Sanitary Sewer

Facility Storm Drainage

Plumbing Equipment

Plumbing Fixtures

Section I - General Standards

These standards apply to all projects. Additional standards for individual project levels are listed in SECTION II - LEVEL SPECIFIC STANDARDS.

Commissioning of Plumbing

See Section D.1 Commissioning.

Plumbing Piping

1. Every new building shall be provided separate plumbing and fire protection systems, each with individual means of isolation, backflow, and metering. Refer to D.33 for metering and backflow preventer requirements. Where building additions are planned, consult with UES to determine the best option for the service capacities needed.
2. **CN22-1: The design of the water distribution system in ~~on multi-level~~ buildings shall provide an easily accessible capability of cutting off all water supplies on each floor level and each restroom, independently of the other floors and restrooms.**
3. All high-density water use areas, such as laboratories, shall be equipped with easily accessible isolation valves. Emergency shower and eyewash equipment shall each receive proximate service isolation ball valves capable of being locked in the open position.
4. All water supply pipes shall be Type "K" copper. Sizes less than 2" above grade may be soldered or brazed. All below grade and sizes 2" and greater shall be brazed. Nonmetallic piping and fittings are is prohibited for potable water service inside buildings except as noted here:
   - Potable building water < nominal 140ºF supply lines one inch (1") and smaller may be ASTM F877 crosslinked polyethylene (PEX) for interior above slab applications. Connections shall be ASTM F-1807 brass or copper insert and crimp fittings, slip on type compression fittings are not acceptable. Materials provided shall be installed in accordance with their product listing and colored red for hot and blue for cold water applications. Piping shall be run concealed or otherwise protected from general access. Details for additional support and strapping shall be provided at all flush valves for stability during design/submittal review. Exposed lines in dedicated equipment service areas are permitted where not subject to mechanical damage. Installing contractor shall have a minimum of 3-years' experience installing PEX piping.
   - Copper tool type pressed fittings may be used where directly accessible at equipment and associated grade level access panels, or where exposed and directly accessible within reach from an A-frame ladder verified to fit within the space, per manufacturer's recommendation where reviewed and accepted by UCF Facilities Operations prior to inclusion in the Construction Documents. Acceptable devices include ProPress or Facilities Operationsapproved equivalents. All components including joints, accessories, and copper press tools, shall be of the same manufacturer. Submittals including shop drawings indicating proposed locations, proof of installer's manufacturer training, and data sheets on all components shall be approved by the Owner prior to installation. Slip-on type compression fittings are not acceptable.
5. Access shall be provided to all controls, cabinets, equipment, valves, and similar serviceable items located above ceilings or otherwise concealed from view, including automatic valves and associated wiring and connections at, over, and behind fixtures. Overhead above ceiling components shall be within reach of a maximum eight-foot (8') A-frame ladder on grade. Ceiling openings shall be located at the designed service point and sized not less than a nominal 2'x2'. The item shall be shall be identified by permanently applied labels at the point of access with letters not less than 0.5" and reasonably legible from adjacent grade access. Verify style of label preferred (printed or engraved) with the project manager for aesthetic applications. Hinged metal access doors shall be provided in walls and inaccessible ceilings for all valves,

regulators, and clean-outs. A piping chase shall be provided.

6. All exterior valves shall be fitted with a concrete, onepiece valve box unit having an attached metal cover.
7. All exposed exterior piping finishes shall be coordinated with area aesthetics and provided with a smooth protective surface resistant to damage from UV, weather and abrasion. Insulation where provided shall be minimum UV resistant PVC or metal jacketed with matching manufacturer approved fasteners. The building penetration shall be permanently sealed with grout or similar non-shrinking material and escutcheon ring provided in visible public areas. Exposed foam, insulation, or tape is not acceptable.
8. **CN22-2: All valves must be of American manufacture.**
9. **CN22-3: Butterfly valves are not permitted in potable water or fire suppression systems.**
10. All potable water system general valves up to 2" shall be threaded full port ball valves with a quarter turn handle. All wetted areas, body and stem shall be 316 stainless steel (SS) with Teflon seat. Handle and fasteners shall be minimum 304 SS. Drain valves for water systems shall be minimum 3/4" ~~full port ball valves~~ with threaded hose connection and cap matching valve body material. Valves installed in insulated piping need extended handles to clear insulation. All valves must use NIBCO, BRAY or WATTS as basis of design. Substitutions must be approved by UES during design. Submittals shall be approved by the owner prior to installation.
11. New plumbed service lines, including but not limited to compressed gases, air, water, and fuel, shall be provided with adequate labeling and identification for the material conveyed including flow arrows. Markings shall be applied near each branch connection, both sides of penetrations through wall and floors, at access doors, adjacent to equipment and other points of termination and throughout spaced at maximum intervals of 25' so that all sections are readily identified. Maximum pressure rating labels shall be included in markings on compressed air and gas distribution pipes. See D.11 for additional requirements.

Facility Sanitary Sewer

1. The building sanitary drainage shall be piped by gravity to a point five (5) feet outside the building and shall be connected to the site sanitary system.
2. Wye strainers shall be equipped with valves for blow-down cleaning.
3. Floor drains with trap primers shall be provided in all toilet rooms, janitorial closets, mechanical rooms, and at emergency eyewash and shower equipment stations except as noted here.

Level D HOUSING
Floor drains are not required within private residential units.

4. Clean-out plugs in piping shall be set with Teflon sealer or other approved lubricant.
5. Laboratories and similar areas with potentially damaging effluents shall be provided chemical and or heat resistant piping as determined appropriate by the designer of record for the application. BOD shall be Orion or Fuseal, or equal as approved by FO. Proof of installer's manufacturer training on installation, and data sheets on all components shall be approved by the Owner prior to installation. The installed product shall be specified to be provided with a set of matching installation and joining tools, in new/good operating condition, for turnover to the owner at project completion. A fully qualified and trained representative of the equipment manufacturer who is thoroughly knowledgeable of the specific installation will provide a minimum two (2) hour training session to personnel selected by the Owner, and must be video-recorded by the Contractor. Alternative training and tool options shall be approved in writing by the Director of FO.

Facility Storm Drainage

The building storm drainage shall be piped by gravity to a point five (5) feet outside the building.

Plumbing Equipment

1. All sump pumps, except for elevator service locations, shall be 316 stainless steel (SS) (impeller, shaft, and housing minimum) with maceration. Elevator service sumps shall be minimum SS shaft.

Plumbing Fixtures

1. All restroom plumbing fixtures shall be white vitreous china complying with ASME A112.19.2. No floormounted plumbing fixtures are allowed. All fixtures shall be supported by a cast iron or steel, concealed, wall-mounted carrier. Carriers shall have adjustable support plates, alignment trusses, and mounting fasteners.
2. Fixtures and fittings shall be from one manufacturer and of similar character in any room or location. Escutcheons, handles, etc., on the different fixtures shall be of the same design.
3. All fixtures and fittings shall be submitted for approval with cut sheets and full description.
4. All exposed metal not otherwise specified shall be polished chromium on brass or bronze. All water supplies to fixtures shall be provided with stops. Cast brass P-traps with cleanouts for each lavatory and sink must be provided.
5. Garbage disposals are prohibited except where requested in housing facilities or retail food service kitchens. When requested provided models shall be minimum ¾ HP, with durable stainless steel (SS) grind components, and minimum 5-year warranty. Electrical circuits to disposals shall be dedicated. Basis of design shall be InSinkErator with alternatives approved by FO during design.
6. All public water closets shall be tankless and provided with concealed wall mounted carriers except as noted here.

LEVEL C RENOVATIONS:

New and replaced water closets in renovations shall be provided with concealed wall mounted carriers. Existing floor mounted water closets may remain in place where they are not affected by work. Wall mounted are preferred.

LEVEL D HOUSING:

Single water closets located within private residential suites are not required to provide concealed wall mounted carriers. Wall mounted are preferred.

LEVEL E LEASED PROPERTY (FIVE YEAR LEASES OR LESS):

Single water closets located within retail suites are not required to provide concealed wall mounted carriers. Wall mounted are preferred.

7. All water closets and urinals shall be equipped with automatic sensor hardwired flush valves, batteries are not permitted. Water closest shall be rated for a maximum of 1.28 gallons per flush. Urinals shall be rated at a maximum of 0.125 gallons per flush.
8. All public restroom lavatories shall be provided with hardwired, touch-free controlled faucets and 0.5 gallons per minute (gpm) flow rates. Battery-powered faucets are not permitted. Basis of design faucets shall be Zurn Z6915 for warehouse parts compatibility. Acceptable alternatives shall be reviewed with FO during design. Metering faucets where used and approved in advance by Facilities

Operations shall be rated at maximum 0.25 gallons per metering cycle. Private lavatory faucets shall be rated at maximum 1.0 gpm. Non-lavatory sink faucets (other than service sinks) shall be rated at maximum 1.5 gpm.

9. Separate control circuits shall be provided per restroom. Automatic flush valves and touch free faucets shall be on separate hardwired circuits in multi-stall restrooms.
10. Showerheads (other than safety showers), where provided, shall be rated for 2.0 gpm or less and coordinated with any associated mixing valves.
11. Faucet valve fittings shall be solder or mechanical press. Compression X type fittings are not permitted.
12. All lavatory sinks in solid surface countertops shall be under-counter mounted.
13. Hose bibs with integral vacuum breaker shall be provided at a minimum as indicated here:
    - In mechanical rooms
    - At one hundred-foot (100') intervals on the perimeter of exterior wall areas (new construction or additions).
    - On each roof area (North, South, East, and West) within the parapet wall if the roof membrane is single ply material. For modified bitumen roofs with HVAC equipment, a roof-mounted hydrant with threaded hose end connection shall be provided within 50-feet of all air conditioning equipment and grease exhaust fans for maintenance.
    - All hose connections in areas accessible by the general public shall be operable by 5/16" standard loose key and concealed in enclosed recessed tamper resistant wall boxes
14. Drinking fountains shall be semi-recessed wall mounted, mechanically cooled with a hermeticallysealed singlephase compressor, and offer front and side antimicrobial activation buttons. Basis of design is ELKAY Enhanced EZH2O Filtered with submittals approved by the Owner prior to installation. Bottle-fill capability shall be included unless located in public areas of performance venues or stadium seating areas where limitations are imposed on outside or personal drink containers. Bottle-fill station shall be integral to the unit including hands free filling, a low energy visual filter monitor, automatic filter status reset, and a drain. Models shall be chosen and specified to be compatible with Elkay 51600C 6000 Gal 12/Month filter (preferred), Elkay 51300C, or owner approved equal. One (1) ADA accessible drinking fountain shall be provided at each location for bilevel access. Valves, drains and attachments shall be installed for easy access and operation without special tool. See D.9 for additional area finish coordination.
15. Departments requesting convenience water or ice dispensing appliances are encouraged to consider a campus standard permanently plumbed drinking fountain [KN]. All other equipment shall be department funded specialty equipment as outlined in D.11-1. See below and See below and D.9 for additional finish coordination.
16. Continually running water appliances such as reverse osmosis (RO) or deionized (DI) water systems and final connection lines shall be provided with means of secondary containment and overflow protection. The overflow protection shall be a permanently installed means to direct the secondary containment to an area drain, or a sensor in the secondary containment wired to an automatic valve that will turn off the water supply upon detection of water. See D.9 for additional finish coordination
17. Water supplies for specialty water dispensing equipment and appliances shall be permanently piped to the appliance to the furthest extent possible with proximate isolation valves. For all others provide a plumbing wall box outlet with isolation valve within approximately six (6) feet of the appliance. Final connection lines to the appliance shall be braided stainless steel (SS).

Knight Notes

22-1: *Departments and designers should be aware that the State's insurance does not include coverage for stand-alone water damage incidents. Subsequently, water damage risks should be minimized by providing professionally installed components and reducing the types of water appliances and associated distribution infrastructure. Departments may be subject to expenses incurred from water damage by failure of locally installed devices.*

18. Floor drains shall be provided with a threaded trap primer connection. Strainers shall be nickel alloy or polished brass.

19. Custodial mop sinks shall be provided with a wall mount service fixture with lever handles, upper support rod, built in stops, vaccuum breake, and 5/8" threaded male hose outlet connection.

20. Submittals for all fixtures shall be provided for owner review and approval prior to installation.

23

Division 23 - HVAC

This section includes:

Section I - General Standards

Commissioning of HVAC

Design Setpoints - Occupied Hours

Design Setpoints - Unoccupied Hours

Instrumentation and Control for HVAC

Piping and Pumping

HVAC Air Distribution

Kitchen, Kitchenette and General Exhaust

Lab, Shop, and Research Exhaust

Filtration and Disinfection

(cont'd on Page D.23-2)

Section I - General Standards

These standards apply to all projects. Additional standards for individual project levels are listed in SECTION II – LEVEL SPECIFIC STANDARDS if applicable.

1. Every new building shall be serviced by dedicated separate mechanical, electrical, and plumbing systems to be isolateable and to operate independently. Where building additions are planned, consult with facilities to determine the best option for the service capacity needed, and coordinate updates to existing main feeds and signage to reflect added services and emergency disconnects.
2. In major renovations and new (non-existing) systems, all condensate shall be routed to dry wells, condensation recovery equipment or storm water drains. New sanitary discharge of condensate is not permitted. All piping shall be run in a manner to avoid trip hazards or crossing primary service access. Crossovers, protective covers, and or warnings shall be provided where deemed necessary by the owner.
3. One-pass domestic water-cooling systems are not permitted. This includes process chillers used for research labs.
4. All abandoned, permanently disabled, or non-functional equipment and associated components shall be fully removed to the furthest extent possible and all support utilities properly capped and terminated. It is the responsibility of the installing department, where applicable, to pay for any costs incurred. Renovations shall include full removal of all such equipment within its scope.
5. **CN23-1: A 25-year life cycle cost analysis (LCCA) shall be provided for the mechanical systems for each project where total cooling capacity exceeds 40 tons. At least three (3) schemes must be included in the analysis. One (1) of the schemes considered must be a central system, such as the campus district cooling loop. The three schemes must be presented to the UCF Director of Utilities and Engineering Services for review.**
6. The unit ID for all new equipment being installed in an existing building, shall be coordinated with the existing units in the building. There shall be no duplication of existing unit ID numbers within the same building.
7. MDF/IDF rooms shall have dedicated terminal unit supply from the building general HVAC and DX fan-coil units (VRF preferred) one hundred percent redundancy. All suspended cooling coil equipment shall have secondary drain pans with overflow prevention controls. Chilled water piping and condensation, plumbing or roof drains shall not be routed directly over server equipment.
8. All concealed controls, cabinets, equipment, valves, and similar serviceable items hidden above ceillings and in concealed spaces shall be located with adequate service access. Overhead above ceiling components shall be within reach of a maximum eight-foot (8') A-frame ladder on grade. Ceiling openings shall be located at the designed service point and sized not less than a nominal 2'x2'. All items shall be identified by permanently applied printed labels at the point of access with letters not less than 0.5" in height and reasonably legible from adjacent grade access. Verify style of label preferred with the project manager for aesthetic applications.
9. **CN23-2: When a mechanical room is located in close proximity to classrooms or office, soundproofing is required. Close proximity is defined as adjacent to or across a hallway of not more than 6 feet width from the mechanical room.**
10. All mechanical rooms shall be supplied with conditioned air.
11. **CN23-3: Clearance around mechanical equipment, where applicable, must meet or exceed manufacturers required clearance. Indicate clearances for all mechanical equipment on drawings, including full coil replacements.**
12. Individual floor mechanical rooms for multi-story buildings shall be stacked vertically.

Division 23 Contents

(cont'd from Page D.23-1)

Central Heating Equipment

Air Handler Units, Coils, and Associated Equipment

Split Direct Expansion (DX), Variable Refrigerant Flow (VRF), Mini Split Units

System Quality Assurance and Contractor Turnover to Owner

Section II - Level-specific Standards

13. Electrical: Refer to Section D.26 Requirements.
14. A training agenda and schedule shall be provided to the Owner for approval no less than four weeks prior to the requested training date. Refer to the specific project Owners Project Requirements (OPR).
15. **CN23-4: All projects involving addition of, removal of or modification to any HVAC system shall utilize the UCF provided Systems Usage Plan matrix. The contractor is to coordinate activities and responsibilities on this matrix document in conjunction with their project schedule. The purpose is to clearly communicate to all project stakeholders who are responsible for which systems at which times, and when systems will be demolished, disabled, installed, startup, TAB, Cx and turnover as well as documenting needs for temporary heating or cooling.**
16. **CN23-5: All projects involving addition of, removal of or modification to any HVAC system shall have a pre-TAB conducted of the entire system(s), as determined by UES, that will be affected by the project to fully understand existing conditions and performance characteristics that may impact the successful completion of the project and the existing systems to remain.**
17. All projects with new equipment and/or occupancy changes to the record HVAC and life safety design basis shall include verification that heat load and ventilation is adequate. Where there are obvious triggering changes or where no record HVAC design or occupant load data is available, the project design shall include the necessary surveys and tests and balance procedures to be completed and submitted during design review to demonstrate adequate HVAC. Where the need for a heat load calculation and/or ventilation study is questionable, the project manager must provide all equipment, occupancy change, and HVAC information to Utilities and Engineering Services for evaluation to determine if a study is necessary. All heat load and ventilation studies shall comprehensively cover the project space and all affected existing spaces andshared systems, which may extend beyond the initial project boundaries. Where the analysis shows an inappropriate load capacity, the project design is required to include all HVAC system and control modifications to function within acceptable ranges.
18. All projects with shell space in business occupancy areas shall provide a basis of HVAC design able to support a minimum occupant load of concentrated business use at 1/50 net square feet with at least 10% of the space calculated at 1/20 net square feet for meeting areas. Shell space in educational and assembly occupancy areas shall provide a basis of design to support a minimum occupant load of 1/20 net square feet.
19. The use of ceiling fans is prohibited except for in residential facilities, and outdoor patio and similar service type spaces. All costs associated with any requested area fans such as, but not limited to, installation, routine maintenance, specialty cleaning, and replacement are the responsibility of the requesting department. Installed fans shall be heavy duty and commercially rated where applicable.

Commissioning of HVAC

See Section D.1 Commissioning.

Design Setpoints - Occupied Hours

1. When cooling, normal building temperature setpoints shall be 74° F.
2. When in heating mode, normal building temperature setpoints shall be 69° F.
3. Temperature setpoints for corridors and large common spaces shall be set to 78° F when in cooling mode and 68° F when in heating mode.
4. Outdoor air ventilation shall maintain positive building pressure by providing a minimum of 5% greater OA CFM than scheduled exhaust.

Design Setpoints - Unoccupied Hours

1. When in cooling mode, normal building setpoints shall be 82° F (or HVAC off), and upon request can be lowered, but not below 78° F.
2. When in heating mode, normal building temperature setpoints shall be 63° F (or HVAC off), and upon request can be raised, but not above 68° F.
3. Intermittent operation of the HVAC system during humid weather condition, on weekends and holiday periods shall be permitted to maintain indoor relative humidity levels.
4. During unoccupied periods and when there are no exhaust systems enabled then the outdoor air may be shut off. HVAC system startup shall begin a maximum of 120 minutes prior to scheduled occupancy.

Instrumentation and Control for HVAC

1. Refer to latest version of UCF Building Automation Specifications located at https://fp.ucf.edu/resources/standards-and-requirements/
2. Building Automation System (BAS) room temperature sensors shall be configurable, with user-adjustable temperature range and occupancy override capabilities in office suite sections, classrooms and meeting rooms, or where indicated by UES. Room temperature settings in corridors, lobbies, and similar transient spaces shall be non-adjustable at local thermostat. Sensors should be located to allow for reasonable area control.
3. All building HVAC Direct Digital Control (DDC) systems shall be on emergency power circuit where available or provided with UPS type backup as directed by UES.
4. Supply air static pressure shall have an automatic reset strategy within the sequence of operations.
5. Supply air temperature shall have an automatic reset strategy within the sequence of operations based on zone temperatures and zone humidity readings.
6. Ventilation control shall allow for activation or deactivation of demand control ventilation routines but the basis of ventilation calculations shall be the latest published version of ASHRAE Standard 62.1, utilizing the Ventilation Rate Procedure.
7. Where airflow measurements stations are provided they shall be specified with the following minimum features:
   a. The transmitter shall include BACnet connection.
   b. The sensors shall be provided by the same manufacturer as the airflow station. The number of sensor modules per airflow measuring station will be based on manufacturer's recommendations.
   c. Sensors shall be factory calibrated and fully field serviceable.
   d. Sensors shall generally not be affected by dust, temperature, pressure, or humidity.
   e. Sensing methods employing multi point thermal dispersion devices are not acceptable.
   f. Measurement system accuracy shall be +/- 3% of volumetric duct airflow rate and shall not require factory re-calibration to maintain accuracy.
   g. Materials of construction, such as supports and mounting hardware shall be aluminum or stainless steel and able to withstand the maximum pressures and velocities of the application.
   h. The sensing module for the airflow measuring station shall be mounted for maintenance accessibility and include any gasketing to seal the measurement chamber from external airflow and moisture.
   i. Basis of design shall be Accturol Vortek and CRC AFW. Substitutions shall be approved by UES during design. Submittals shall be approved by the owner prior to installation.

8. Where possible, the main building fire alarm control panel (FACP) shall be used to control smoke control as well as stair pressurization systems with additional interfaces provided as required by code. Control panels shall be located in a main lobby adjacent to the fire department accessible entrance. Passive air bypass vents and dampers are preferred over HVAC reversal and door operator controls. Individual components shall be evaluated for the need for UPS power. Conduits, controls, and equipment shall be identified as outlined in this division and as part of the fire alarm/life safety system in red with equipment types and locator numbers corresponding the system schematic in the manual.

9. A systems manual outlining the initial acceptance test methods, summary with detailed system schematic diagram, test and balance procedures, comprehensive sequence of operations, and a routine semi-annual testing procedure shall be provided with the design. The contractor shall be directed to execute the acceptance testing for the review and approval of the Engineer of Record prior to final AHJ witnessed testing. Completed Engineer approved documents and manual shall be provided to the Owner at Certificate of Occupancy.

10. If the building has a fire alarm system, the HVAC smoke detection shall be a part of the system and function as outlined in this Standard. If the building does not have a fire alarm system, single station duct smoke detection may be installed. A remote-control station with visual and audible alarm (as required by code shall be provided for each device and located in the main lobby and must be mounted no higher than five (5) feet above the finished floor. The station shall include remote means to reset and test with a keyed switch. Installation shall include all code-required accessories, sampling tubes, housing, sensitivity testing, SFM witness testing, and permanent labeling at the station of the sensing device location and units served. The basis of design is System Sensor devices. Submittals must be approved by the Owner prior to installation. Witnessed AHJ testing, sensitivity, and air flow readings are required prior to CO. Access hatches are required at all duct detectors.

Piping and Pumping

1. All chilled water lines shall enter the building through the mechanical room floor as close to the building exterior as possible and transition to above ground loops throughout the building.
2. All lines shall be run in a concealed manner, except for open ceiling designs. Exposed piping across roofs and or visible building faces is prohibited.
3. All vertical pipe sleeves shall extend three inches above floor level.
4. Chilled water piping shall be routed to avoid being located above any electrical and IT equipment, and routed in utility areas and common corridors avoiding user work spaces where at all possible. If water lines of any type must be located over electrical equipment a water shield or drain pan must be installed.
5. Underground chilled water branches shall be sized for no greater than six (6) feet per second velocity and no greater than ten (10) PSI total pressure drop from the connection to the building.
6. A pressure gauge shall be provided on all building chilled water supply and return lines just prior to or immediately located inside where the chilled water enters and exits the building.
7. All gauges shall be provided with isolation ball valve for ease of replacement with features as outline below.
8. A temperature sensor shall be provided on all building chilled water supply lines just prior to or immediately located inside where the chilled water enters the building. All buildings utilizing tertiary pumps shall have two parallelpiped chilled and /or heating hot water pumps sized for N+1 redundancy.
9. Buildings utilizing a tertiary pump shall incorporate a bypass around the pump with a manual check valve. The

check valve must also have isolation valves upstream and downstream to allow for servicing.

10. Use of vaults are prohibited on the building side of the utility connection.
11. Pipe flange bolts shall be ASTM A307 grade B hex head bolts.
12. Pressure gauges shall be liquid-filled with minimum four and one-half inch face, onequarter inch NPT bottom connection, and black scale with white background. The operating pressure of all pressure gauges shall be midrange of the total scale.
13. Thermometers shall be, 9" Scale and the operating temperature of all thermometers shall be mid-range of the total scale.
14. All temperature gauges shall be installed in wells and include a long enough stem standoff to properly insulate with an isolation valve for ease of replacement.
15. Construction strainers shall be externally secured to the housing and the new final strainer installed after all building flushing has been completed UES shall verify both strainers are provided during final punch walk for the project to receive closeout.
16. All chilled water and heating hot water shall be welded unless otherwise noted here in. Type K rigid copper pipe can be used with soldered or brazed joints for all chilled and heating hot water piping 2" and smaller as determined by UES review during design. Brazing is preferred when a permanent, robust metal-to-metal joint is needed. Tool type pressed fittings suitable for use with copper pipe in chilled and heating hot water systems may be used in readily accessible locations in mechanical rooms or at exterior unit connections where reviewed and accepted by UCF Facilities Operations prior to inclusion in the construction documents. Basis of design shall be as manufactured by Viega ProPress, Victaulic Vic-press, or UES approved equivalents. All components including fittings, accessories, and copper press tools shall be of the same manufacturer. Submittals including shop drawings indicating proposed locations, proof of installer's manufacturer training on joint installation, and data sheets on all components shall be approved by the Owner prior to installation. Slip-on type compression fittings are not acceptable. Soft copper refrigerant lines are prohibited except as noted in the DX section
17. Mechanical grooved joint systems may be used for 2 1/2" and larger piping where readily accessible and located in mechanical rooms containing mechanical units or pumps, or at final equipment connections, and where reviewed and accepted by UCF Facilities Operations prior to inclusion in the construction documents. Mechanical grooved joint systems are not permitted on roofs, concealed, or below grade applications. Three flexible couplings may be used in lieu of each flexible connector for vibration attenuation where specified in the design. Joints shall only be provided where necessary due to maximum pipe length, vibration attenuation, directional changes and to facilitate equipment access. Basis of design shall be Victaulic or Facilities Operations-approved equivalents. Grooved systems shall include all required grooved componentry including grooved-joint couplings, press and grooving tools, fittings, and accessories and shall be of the same manufacturer. Submittals including shop drawings indicating proposed locations, proof of installer's manufacturer training on grooving and joint installation, and data sheets on all components shall be approved by the Owner prior to installation. A direct employee representative of the grooved system manufacturer shall be engaged to periodically review the product installation and issue a final compliance report. Identified deficiencies in the installation shall be corrected and satisfactory report achieved prior to final acceptance.
18. Triple-duty valves are prohibited.
19. Safety relief valve piping shall be routed to the floor drains.
20. All pumps shall have suction and discharge isolation valves.

21. ~~Threaded bronze, full port, ball isolation valves with a quarter turn handle will be used for all interior piping for pipe sizes from one-quarter inches to two inch in diameter.~~ All process, chilled, or heating water general duty valves up to 2" shall be threaded full port ball valves with a quarter turn handle. All wetted areas, body and stem shall be 316 stainless steel (SS) with Teflon seat. Handle and fasteners shall be minimum 304 SS. Valves installed in insulated piping shall be provided with extended handles to clear insulation. Needle valves are prohibited. All valves must use NIBCO, BRAY or WATTS as basis of design. Substitutions must be approved by UES during design. Submittals shall be approved by the owner prior to installation.
22. Minimum CW piping insulation and jacketing shall be provided as follows:
    a. Cellular glass insulation shall be provided for all exterior above-grade chilled water piping.
    b. Provide heavy-duty smooth finish aluminum jacketing (minimum 0.0016") for all insulated piping located exposed outdoors and in mechanical rooms up to six (6) feet above finish floor (AFF). Jacketing bands shall be minimum one-half inch wide, with spacing of twelve inches between bands.
    c. PVC jacketing with manufacture standard fasteners may be substituted for aluminum over cellular glass insulation in mechanical rooms above six (6) feet (AFF).
    d. Insulation and jacketing shall be protected and continuous through building penetrations and pipe supports.
    e. Chilled water pump, process cooling pump bodies and similar equipment, that may require periodic inspection, maintenance, or as requested by UES during design, shall include a removable insulation box/covering of the equipment and include quick release latches.
    f. Refer to Section D.33 for Utility Piping Requirements.
23. Labeling and flow arrows shall be provided for all piping, in a mechanical room or any concealed area within the building. Labeling shall be within 5 feet of any change in direction and a every 25 feet on straight pipe. Labels shall be mounted on both sides of floor/wall penetrations and adjacent to all valves and flanges.
24. **CN23-6: All new or replacement chilled water piping systems shall be chemically cleaned prior to connection to the main chilled water system by requesting coordination of treatment with the UES Water Treatment Vendor. Failure to follow the hydronic flushing procedural instructions by flushing detergent, dirt, rust, debris and other detritus from the piping into the hydronic chilled water or heating hot water coils will result in rejection of acceptance of that equipment, and the contractor shall be responsible for replacing the impacted coils at their own expense and shall be responsible for liquidated damages resulting in project delays resulting from these actions.**
25. **CN23-7: Only chemicals approved by UCF UES shall be introduced into the UCF chilled water piping system. Raw or potable water shall not be introduced into the campus chilled water piping system.**
26. If the final piping connections are not made immediately after cleaning, all open ends of the piping shall be capped.
27. Strainers shall be provided upstream of all chilled and/or heating hot water booster pumps and coils. All strainers shall be provided with stainless steel mesh.
28. A manifold pressure gauge shall be provided at each pump suction and discharge, each having additional ports with bronze ball valves for portable instrumentation connections.
29. Constant volume pumps shall have an impeller size recommended by the Test and Balance contractor. Impeller trimming, static and dynamic balancing must be performed by the pump manufacturer. The OEM pump

30. Flexible piping connections and vibration isolation are required for all pumps. All pad-mounted pumps shall have an inertia base.
31. Expansion tank schedules on drawings shall contain the following:
    a. Pre-charge air pressure
    b. Piping system water volume (including equipment)
    c. Min and max system temperatures
    d. Expansion tank volume
    e. Acceptance volume
32. Air separators shall include bottom blowdown with threequarter inch bronze ball valve and garden hose fitting.
33. Tie-ins
    a. Tie-in locations shall be approved by UES.
    b. Thrust blocks shall be installed at either end of tie-in point.
    c. Taps shall be of similar material otherwise made of type 316 stainless steel plate with stainless steel ring flange, compatible with ANSI 125.
    d. Taps shall be Romac stainless steel
    e. Flange gaskets shall be Styrene Butadiene Rubber.
    f. Valve stems shall be accessible from one foot below grade.
    g. Gate valves for tapping surfaces shall conform to American Water Works Association resilient gate valve, with a bronze stem, and be grease packed in compliance with AWWA C504.
34. **CN23-8: All internal parts on tapping machines, such as cutting heads etc., shall be disinfected in compliance with AWWA C601 and C900, prior to making any tap. The cutout shall be provided to the Owner.**
35. The design professional shall provide a computerized hydronic model of the affected system(s) to UES prior to interconnection, demonstrating no adverse distribution impacts.
36. The design intent and details shown in **FIGURE D23-02 CHW TERTIARY PUMPING SYSTEM** shall be used.
37. Building process water loops shall be provided with the following minimum features:
    a. Pressure regulating valve (PRV) arranged with isolation valves, bypass valve, and pressure gauges with shut off cocks on supply and outlets lines as diagramed below.
    b. Backflow prevention and automatic air vent (AAV) with shut off cock.
    c. Valve manifold labels for process served and flow arrows.
    d. A mechanical flow meter to measure the gallons of make- up water.
    e. A pot feeder system with integral filter sleeve and drain valve.

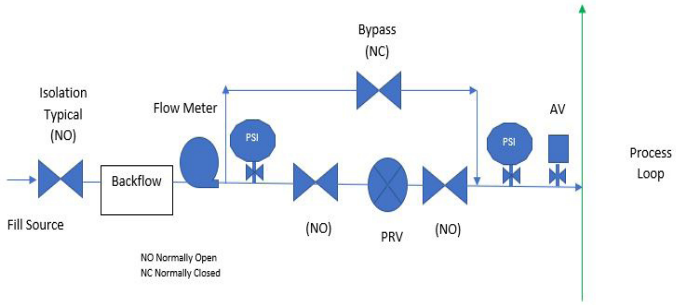

HVAC Air Distribution

1. Traditional registers and diffusers shall be plaque type diffusers and louvered return grills, no hinge-type, constructed of aluminum, and with factory-baked enamel

FIGURE D23-02 CHW TERTIARY PUMPING SYSTEM

Rev. 5/14/2025

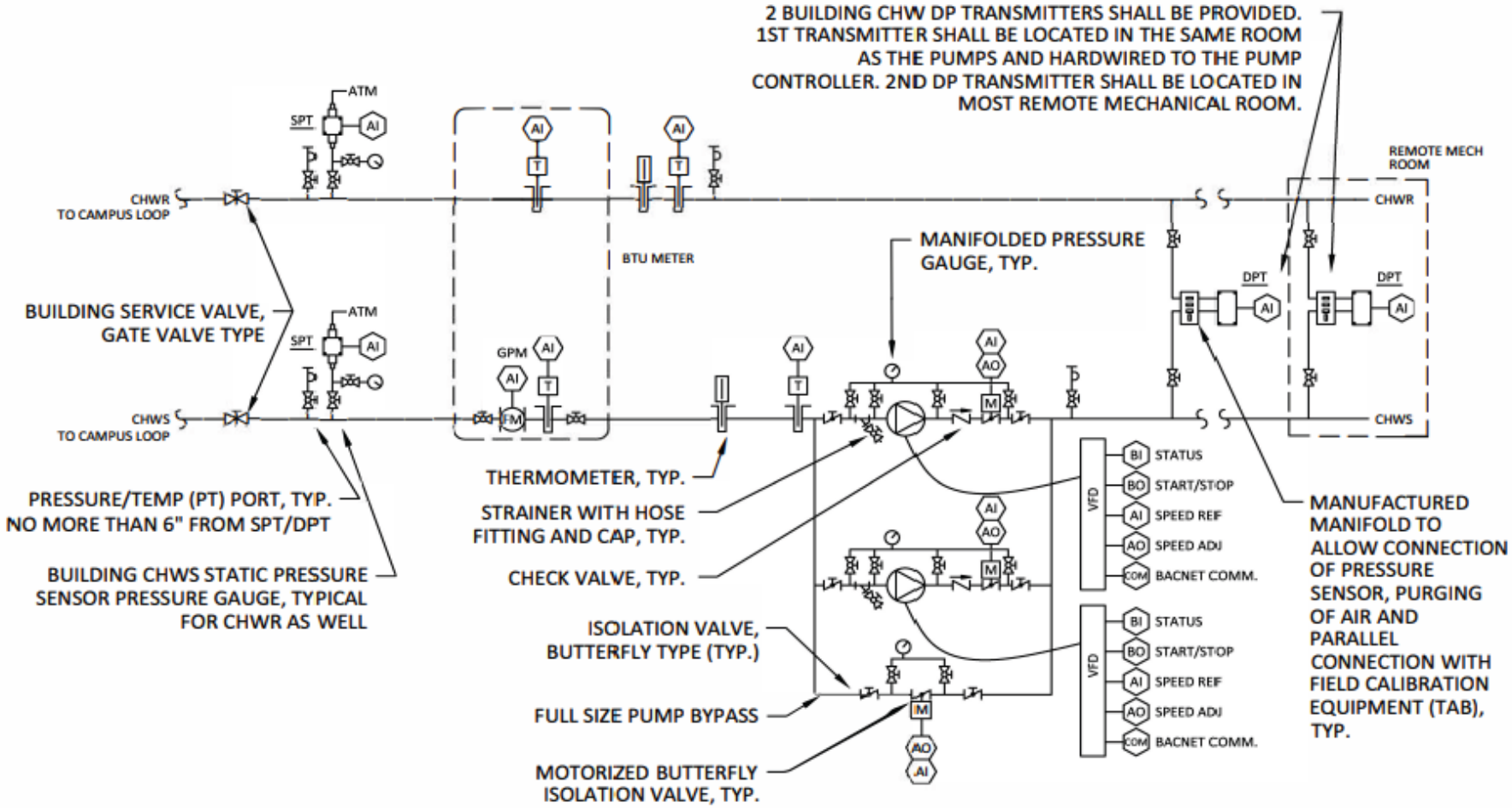

NOTES:

1. REFER TO BTU METER INSTALLATION DETAIL IN DIVISION 33 FOR ADDITIONAL INFORMATION.

finish.

2. Chilled beam systems where used shall include the following:System shall utilize a reverse return piping configuration.
   a. System shall utilize a reverse return piping configuration.
   b. Units shall have hinged type diffusers and be located for access and maintenance.
   c. Units shall receive electronic pressure independent control valves
   d. Beams shall be provided with side and end details which will allow its integration into the applicable (nominal 24-inch-wide) acoustical ceiling grid.
   e. Beams shall incorporate provisions fo measurement of their primary airflow rate. The measurement location must be accessible from the face of the beam and require a single pressure differential measurement.
   f. Beams shall incorporate provisions for measurement of their primary airflow rate. The measurement location must be accessible from the face of the beam and require a single pressure differential measurement. Airflow calibration charts that relate the measurement to the primary airflow rate shall be furnished with the beams.
   g. Label each chilled beam unit with plan number, nominal airflow, maximum and minimum factory verified perforations for airflows, coil type, and ARI certification seal.
   h. Flexible connector hoses shall be provided at all beams and shall be twenty-four (24) inches in length and suitable for operation with a bend radius as small as five (5) inches. Such hoses shall be 100% tested and certified for no leakage at 150% design PSI.
   i. Chilled water piping and equipment in areas with existing chilled beam systems shall match existing materials and joining methods at the units.
   j. Materials and installer qualifications shall be submitted for owner approval prior to installation.
3. All ceiling diffusers shall be provided with factory insulated backs.
4. All diffusers shall be rated for a noise criterion index of twenty-five or less.
5. Perforated diffusers or return grills in office spaces are prohibited.
6. Butterfly dampers with two (2) inch handle standoff located at main trunk upstream of flexible duct connection to diffuser shall be provided. Scoops are prohibited.
7. All rectangular sheet metal duct shall have opposed bladetype balancing dampers.
8. All installed outside air dampers will be provided with the features listed herein. Outside air dampers shall not be included in single pass air handling systems serving laboratories.
   a. Dampers shall be constructed of aluminum with a clean anodized frame to a minimum of 0.7 mill deep.
   b. Blade seals shall be extruded silicone, secured in an integral slot within the aluminum blade extrusions and shall be mechanically fastened to prevent shrinkage and movement over the life of the damper.
   c. Aluminum end caps shall be press fitted to blade ends to seal hollow interior and reduce air leakage. End caps shall be clear anodized. Adhesives or clipon type blade seals will not be approved.
   d. Linkage hardware shall be aluminum and stainless steel, installed in the frame side, out of airstream, and accessible after installation. Linkage hardware shall be complete with stainless steel cup-point trunnion screws to prevent linkage slippage.
   e. Bearings shall be a dual bearing system composed of a Teflon/Celcon-type inner bearing rotating with a

polycarbonate outer bearing inserted in the frame.

f. Dampers shall be custom made to required size, with blade stops not exceeding 1-1/4" in height.

g. Dampers shall be opposed blade or parallel blade action, as indicated on the plans.

9. All outdoor mounted actuators shall have NEMA 4X weather-tight enclosures with integral heaters.

10. Uninsulated flexible ductwork is prohibited. Insulated flexible duct with smooth wipeable inner liner and internal wire helix support may be used in supply from branch to diffuser,not to exceed six (6') feet in length, and supported so that no kinking in ductwork occurs. Flexible duct should be avoided in exposed applications and not pass through walls floors or ceilings.

11. Ductwork, other than flexible as noted above, shall be galvanized sheet metal construction unless stricter requirements for specialized systems apply (kitchen hoods, lab exhaust duct systems as example.)

12. Flanged metal crimped fabric type flexible connectors or similar shall be provided at ductwork connections to equipment mounted with vibration isolators and or containing rotating components.

13. Ductwork shall be sized to avoid the use of internal tie rods. Internal tie rods are prohibited.

14. Minimum ductwork, insulation and jacketing shall be provided as follows:

a. All ductwork, piping and/or equipment insulation systems shall be provided in such a manner as to prevent condensation under all operating conditions. If condensation occurs at any time during the warranty period, the contractor shall be required to re-work the insulation until satisfactory, at no additional expense to UCF.

b. Do not apply insulation until systems have been cleaned and satisfy required pressure/leak tests.

c. All surfaces exposed to the air stream shall be provided with a smooth wipeable finish. Fiber type insulation shall not be exposed to the air stream. All ductwork shall be specified and installed to meet the respective SMACNA standard.

d. Terminal units shall have foil-faced or elastomeric insulation. Exposed fibers or rough coating is not permitted.

e. CN23-9: Rigid duct board insulation to insulate sheet metal ductwork is prohibited outside of mechanical rooms.

f. CN23-10: Rigid duct board insulation over sheet metal shall be used in all mechanical rooms.

g. Duct wrap insulation is prohibited in exposed areas. All ductwork located outside or in exposed aesthetic locations shall be double wall internally insulated Exterior applications shall use stainless steel or aluminum outer wall. Inner walls and exposed indoor application outer walls shall be solid stainless steel or G90 construction as appropriate for the application.

h. In all other interior exposed locations where insulation may be subject to damage, provide a protective aluminum jacket.

i. Glass fabric tape and mastic shall be used for all insulation joints. All other tapes are prohibited.

15. Turning vanes shall be installed in all tees and mitered ninety-degree elbows.

16. All ductwork, airflow monitoring stations, control, fire and smoke dampers shall have access doors for cleaning and maintenance.

17. Duct access doors shall have double walled insulated construction. Access doors shall be the largest commercially available that fit duct section.

18. All louvers shall be extruded anodized aluminum AMCA 550 rated without a damper, Class A, 100% Effective Ratio up to 1200 FPM at 8"/hr rain fall and 50 mph wind velocity, AMCA 540 per FBC, and provided with aluminum or stainless steel, with bird screens. Minimum louver depth

shall be four inches. New louvers installed in proximity to existing shall match existing orientation. Finish colors shall be consistent with area finishes and submittal approved by the Owner prior to installation.

19. All OA louvers shall be sized to maintain a maximum 500 fpm face velocity measured at the free area of the louver. Nominal increases in face velocity may be considered when louver size is not feasible and prior approval has been obtained during design by UES. Minimum free area and maximum pressure drops shall be stated in the design for all louvers and filtration combinations.
20. Louvers and OA filters shall be provided in a manner to prevent wet filter syndrome.
21. A removable and serviceable minimum 304 stainless steel (frame and filter media) mist eliminator(s) shall be provided if the high-performance louver will not prevent wet filter syndrome at the AHU). Louvers and mist eliminators shall be separately submitted for review and approval by UES prior to installation. Submittal shall include at a minimum product construction and replacement part ordering information, free area, and performance curves for the selected design sizes and pressures.
22. All EA louvers shall be sized to maintain a maximum 750 fpm face velocity measured at the free area of the louver. Nominal increases in face velocity may be considered when louver size is not feasible and has prior approval has been obtained during design by UES.
23. All fire dampers shall be curtain style, with an integral sleeve and blades located out of the air stream when in the open position.
24. All combination fire and smoke dampers shall have air foil style blades with blade seats.
25. Insulation is prohibited from being supported by suspended ceilings. Insulation shall be integral to the roof structure and installed in such a manner that it will not interfere with interstitial ceiling space access.
26. Laboratory supply air, laboratory exhaust, and general exhaust shall have pressure independent venturi style air valves or other pre-approved air valve style coordinated with Utilities and Engineering Services.
27. All laboratory valve installations shall be plumbed horizontal (where allowed by the manufacturer) and leak tested via smoke pen or other visual indicator to ensure fully sealed connections on each side of the valve.
28. Variable air volume terminal units, fan-powered terminal units, duct heaters, air flow stations, air cleaning apparatus and air valves shall be installed in accessible locations following manufacturers clearance recommendations.

Kitchen, Kitchenette and General Exhaust

1. All commercial or residential kitchens with cooking equipment shall be provided with approved cooking exhaust hoods vented to the outdoors. Recirculating hoods are not permitted.
2. Kitchenettes with multiple warming type appliances shall be provided with local exhaust vented to the outdoors. Heat loads shall be evaluated. See D.1 for additional requirements.
3. Permanent access and maintenance clearance must be provided for all kitchen and general exhaust fans.
4. Commercial cooking fans shall be hinged on their bases. Lightning protection must not interfere with hinged components. Grease traps must be provided with rainresistant covers. Wall mounted fans are preferred to avoid roof penetrations and wear.
5. All exhaust fans shall be direct-drive where at all possible.
6. Kitchen hood exhaust and make-up air equipment shall have BACnet, BTL certified, factory integrated control system with network-discoverable points pre-configured.

Lab, Shop, and Research Exhaust

1. Basis of design for conveying hazardous fumes, vapors, and chemicals shall be 100% exhaust to the building exterior without recirculation. Ductless chemical fume hoods and similar recirculating filtration equipment are not permitted in lieu of local exhaust except for biosafety cabinets, glove boxes, and similar appliances as approved by EH&S and deviation. See D.11 for additional research area and ventilation equipment criteria.
2. Spaces such as central sterilizers, cagewash equipment, and glass wash areas, shall have a separate exhaust system. Ductwork from these devices shall avoid long horizontal runs. Slope horizontal runs towards source equipment. Moisture eliminators shall be considered for use at hoods.
3. All fume hood, chemical and fume conveying ductwork shall be of 316 stainless steel construction with seamless, welded, liquid-tight joints ground smooth, with no internal projections.
4. Lab exhaust fans (general and hood) shall be direct drive and manifolded with N+1 redundancy (fan and VFD) arranged with lead lag and alternating fan operation controls. Alternatives shall be approved by UES during design. Lab exhaust fans shall be factory-assembled, induced dilution high plume, with motors isolated from exhaust air stream.
5. All components within the airstream that are not fiberglass must be provided with UV (where outdoors) and corrosion resistance.
6. Plenums shall be a minimum of 12-gauge 316 stainless steel. Plenum bottom shall be pitched in three directions to facilitate positive drainage with manual stainless-steel drain connection and ball valve with capped hose bib connection for maintenance.
7. Isolation and bypass dampers shall be 316 stainless steel construction.
8. HEPA filter systems with booster fans shall have direct drive fans.
9. Lab exhaust fans shall be provided with premium finished coating on all exposed surfaces for longevity including UV resistance. All fans submittals shall include coating details and be approved by UES prior to installation.
10. Lab exhaust fans shall have a minimum 5-year factory warranty on the entire assembly.
11. Laboratory airflow control valves shall be electronically operated with integral closed loop controls and real-time air flow measurement feedback to safely implement demand based static pressure control. Mechanical pressure based only control valves are not permitted. Selected valves shall include the following features:
    a. The valve shall operate accurately independent of minimum pressure requirements and perform safely with optimal energy efficient airflow at maximum 0.3” pressure drop.
    b. Guaranteed accuracy to within +/- 5% of air flow.
    c. Minimum 10:1 turndown ratio (10% of full load capacity).
    d. Fully functional installed in any orientation and without required straight duct runs.
    e. Valve shall be designed impervious to lint or dust and not require scheduled maintenance; all serviceable parts shall be outside of the air stream. Units shall be installed with service access to all covers and modules within reach from grade with a standard A-frame ladder.
    f. Minimum five (5) year warranty.
    g. BACnet connectivity.
12. See Division 11 for additional lab, shop and research information

Filtration and Disinfection

1. All 100% outside air (OA) systems shall have MERV-9 Dual 9 30/30 pleated pre-filters and MERV-14A bag style final filters.
2. All non-100% OA systems shall have MERV 14A bag style filters.

3. Fan coils and direct expansion type units shall have MERV 9/9A pleated filters with nominal 1 year lifecycle. Suspended units shall have a hinged face type filter backed grill located above the ceiling for ease of maintenance. Mini split system shall be provided with washable filters. Alternative filters and placements shall be approved by FO during design
4. All filters shall be standard sized for minimal shop stock variation. Standard sizes shall be generally divisible by ten (10) or twelve (12). Proposed filter sizes shall be verified matching existing shop stock during design. Alternative filters and placements shall be approved by FO and UES during design.
5. Specialty filter O&M requirements beyond the general building HVAC supply (such as for clean rooms and research areas) are the responsibility of the department.
6. All replacement or new AHU equipment with a fan power of 15 hp or more, except for wall hung ductless mini-split dx, shall come factory equipped or field installed with ultraviolet lighting in the UV-C bandwidth on the wet/supply side of the coils. Each door serving sections illuminated by UV-C light shall be provided with an external viewport, warning stickers, and integral safety disconnect switch. Warning stickers shall also be provided at doors adjacent to UV-C sections. An additional readily accessible toggle switch labeled for manual light disconnect is also required outside the unit as a back up to primary door interlocks. Attached panels, controls, and wiring shall be run in a workmanlike manner and not interfere with operable or serviceable components. Lights to be arranged to remain powered even if AHU is off. UV-C intensity minimum shall be provided for coil/condensate pan cleaning as outlined in the 2019 or latest edition of the ASHRAE Handbook Ch. 62 with nominal 75 $\mu W/cm^2$ dose with reflectors. All exposed wiring and surfaces in the lighted area shall be protected from UV degradation. UV-C systems shall be separately submitted for review and approval by UES prior to installation. Submittal shall include at a minimum details on all components, parts summary sheet, scaled installation diagrams, and manufacturers estimated irradiance on coil face analysis with stated standard $\mu J / cm^2$. RGF Environmental Group, Fresh-Aire UV, and UVR UV Resources are the preferred vendors for lamps to match existing stock. Design shall specify minimum 2 spare new lamps in original shipping carton for each lamp size per fixture array and 1 controller of each type per project.
7. Specialized area wide air-filtration systems (such as HEPA units) shall have BACnet, BTL certified, factory integrated control system with network-discoverable points preconfigured.

Central Heating Equipment

1. Building-based hydronic heating shall be provided by fully modulating, natural gas fired, condensing boilers.
2. Heating hot water systems shall have sediment and air elimination systems.
3. Heat exchangers shall be stainless steel construction with a minimum 10-year warranty. Service bypass blind flange connections shall be installed on both entering and leaving piping on each service loop through the heat exchanger. The heat exchanger must be installed in a way that is easily disconnected and bypassed for service.
4. Boiler turndown shall be a minimum of 10:1 with an O2 monitoring to continually modulate the air/gas mixture.
5. Boilers shall have BACnet, BTL certified, factory integrated control system with network-discoverable points preconfigured.
6. Boiler flue venting shall be UL-listed AL294C individually routed to exterior termination, in accordance with boiler and vent manufacturer requirements.
7. Condensing boilers shall be provided with condensate acid neutralization kits.
8. Start up and owner training shall be provided by factory trained personnel.

9. All boilers shall be provided with individual dedicated electrical disconnect means at an accessible location in the direct vicinity line of sight of the unit. The disconnect shall be able to be locked in the open position. Phenolic identification placards shall be provided at each switch and a corresponding matching identifier provided at the boiler.
10. All boiler rooms shall be provided with emergency stop buttons at all entrances that shut down all fuel supplies to all boilers within the space. Stop button shall be mushroom type resettable with protective cover and phonetic identification placard.

Air Handler Units, Coils, and Associated Equipment

1. Leakage shall be less than 1% of design CFM at +/- 8 inches of static pressure.
2. Units assembled onsite shall be leak tested per manufacturer authorized representative as part of the startup procedure and the leak test findings shall be provided to the Owner.
3. Air handler shall be insulated sufficiently to prevent condensation formation on the outside casing when delivering 52 deg F air with exterior at 80 deg F dry bulb and 71 deg F wet bulb.
4. Unit shall be constructed to ensure 100% thermal break in all modules subject to condensation. AHU supplier shall guarantee the unit shall be free of condensation, under the specified design AHU supply air temperature and the installed environment. No through-metal, internal thermal break shall be provided for all unit casing panels.Air handlers shall be draw-through type.
5. Air handlers shall be draw-through type.
6. Air handlers shall have a minimum of 304 SS for all interior finishes.
7. Air handlers with walk-in sections shall have diamond plated tread plates.
8. The following minimum sections shall be provided with view panels to allow view of the filters, cooling coil drain and pan, and fan assembly, and other sections as requested by UES (UV protected as needed).
9. Unit casing deflection shall not exceed 0.0042” per inch of panel span.
10. Air handler units shall include a 5-year factory warranty.
11. Clearance of air handler unit, piping and ductwork shall be at a minimum the manufacturers recommended clearance.
12. All air handlers are to be installed on a concrete housekeeping pad.
13. Base rail shall be of sufficient height and coordinated with housekeeping pads to ensure required elevation for condensate trap with required trap seal.
14. Provide shutoff valve, strainer, P/T test port and union at each coil supply connection. All strainers shall be specified with stainless steel mesh.
15. Provide P/T test port, automatic balancing valve, union and shutoff valve for each coil return connection.
16. All new air handlers and or coils (including replacements) shall be provided with new control valves. Piping shall plan for respective minimum pipe straight runs before sensors per manufacturer installation requirements (typical five times (5X) pipe diameter).
17. All control valves shall be electronic pressure independent valves (EPIV) with integral balancing valve, stainless ball and shaft, 90-degree actuator with visual indicator of position and manual clutch override capability.
    a. Valve shall fail to full open.
    b. An ultrasonic flow meter (accuracy +/- 2%) shall be integrated with a characterized control valve providing analog flow feedback. The valve shall reposition to maintain the required flow with a +/- 5% accuracy over a pressure differential range of nominal 5 to 50 psig (34 to 350 kPa).
    c. Two immersion temperature sensors for supply and return coil water temperatures shall be incorporated into the valve assembly.
    d. Software shall control the valve to avoid the coil

differential temperature from falling below a programmed setpoint.

e. Real-time data and configuration of valve operating parameparameters shall be available by BTL listed BACnet MS/TP, BACnet/IP, MODBUS or HTTP. Monitored points shall include inlet and outlet coil water temperatures, absolute flow, absolute valve position, absolute coil power and total heating/cooling energy in BTU/hr.

f. Configuration points shall include valve, flow and power settings. Historical trend data shall be stored for up to 13 months and be retrievable in a standard date-time stamped format.

g. Control valves shall have a 5-year manufacturer's warranty.

18. Provide ¼" ball valve taps at each coil piping component e.g. strainer, control valve, coil.
19. Access doors shall have full length hinges with minimum of two lever latches operable from both inside and outside.
20. All walk in sections shall have LED lighting.
21. A 20 AMP 120V GFCI convenience outlet shall be provided on the outside casing next to the fan access door.
22. All AHU fans shall be variable speed controlled and direct drive. Electronically commutated motor (ECM) fan wall arrays are preferred. Motors shall be premium efficiency, inverter duty rated.
23. Variable frequency drives and/or ECM controllers shall be remote mounted from the unit.
24. Internal structure for removal and replacement of motors weighing 75 pounds or more shall be provided.
25. Coil section shall allow removal and replacement of coil.
26. Coils shall be continuous seamless copper tube with aluminum fins.
27. Fin spacing shall not exceed 12 per inch.
28. Coils shall be arranged such that the water is counter flow with the direction of the air.
29. Coils shall be designed to achieve a 16 deg F difference between the supply and return utilizing a two-way control valve.
30. Where space allows, filters shall be accessible from both sides of the unit.
31. Differential pressure transmitters shall be provided for pre-filters and final filters.
32. Filter rack shall be stainless steel or aluminum construction.
33. All drain pans shall be a minimum of 18 gauge 316 stainless steel.
34. AHU fans shall be fan array or redundant plug fan type such that if a fan motor fails, the unit can still deliver design airflow and pressure with the redundant fan(s). Fan array shall be specified wherever laboratories are served that require 24/7 operation. Fan walls shall be specified such that 25% of the fans can fail and the unit can still deliver design airflow and pressure requirements. Single fan units shall be provided with 1 spare fan of each type per project. Consult with UES for preferred fan hp for shop stock uniformity.
35. Provide aluminum backdraft dampers to allow for automatic redundancy should a fan failure occur. Fan array systems with more than four (> 4) fans may eliminate backdraft dampers and provide blank-off plates as approved by UES during design.
36. All fans shall be balanced to limit vibration to less than 0.2 in/sec across the operating range. Provide vibration test results to engineer.
37. The following Coil Piping Schematic shall be used.

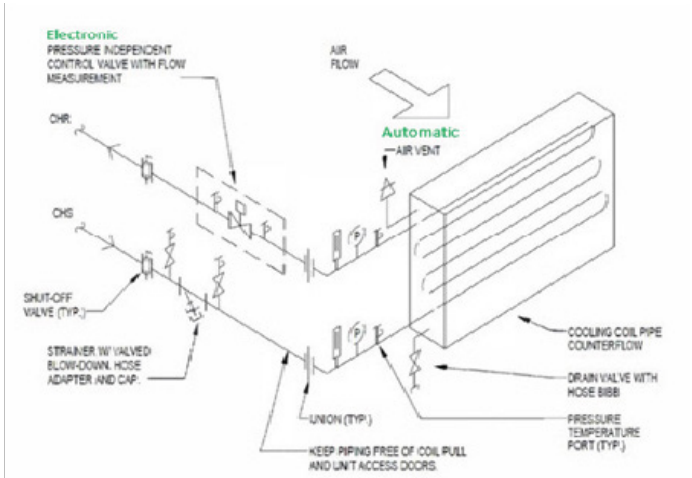

COIL PIPING SCHEMATIC

Split Direct Expansion (DX), Variable Refrigerant Flow (VRF), Mini Split Units

1. All DX and similar units serving areas with occupied and unoccupied uses must have time of day control. Interconnection with existing BAS shall be provided where available.
   a. Stand-alone controls shall be minimum 7-day programable wall mounted hard wired thermostat. matching unit manufacturer. Portable remotes alone are not acceptable for any application. Controls shall be approved by Facilities Operations during design. Bacnet networkable temperature sensors shall be provided and tied to the building BAS where available.
   b. Controls in Housing areas without BAS shall be nonprogrammable, LCD display, with 5-year warranty. Controls shall be approved by Facilities Operations during design.
2. Straight runs of refrigerant lines shall be Type K copper tubing with 15% silver rod type brazed fittings. Soft copper is only permitted within 24" of unit connections. All sets are required to include a liquid line filter drier. Refrigeration access ports shall be provided with locking caps.
3. All exterior pipe insulation shall have aluminum jacketing secured with metal fasteners. Insulation and jacketing shall be continuous through pipe supports.
4. All cool refrigerant/suction line sets shall be insulated with elastomeric insulation continuous through wall penetrations and pipe supports. Condensate drain lines shall also be insulated where condensation on the line is anticipated and will be problematic to adjacent surfaces. All drain traps shall have removable caps or plugs in accessible locations.
5. Fan coils mounted above ceiling must meet manufacturers clearance recommendations and be placed for easy maintenance access, in common circulation areas where at all possible. Service access to the unit shall be coordinated with all area infrastructures and maintained or the unit relocated.
6. **CN23-11: Return air plenums using floor and/or an exterior wall as side of the enclosure are prohibited.**
7. Basis of design shall be ~~Trane,~~ Goodman~~;~~ or Carrier. Mini split basis of design shall be Mitsubishi~~;~~ ~~Daikin~~, or Carrier ~~or preapproved substitute~~. Alternative manufacturers submittals shall ~~must~~ be approved by UES during the design. Any substitution shall be approved by UES prior to purchase.
8. Primary drain pans shall be galvanized steel with welded seams or ABS plastic. Alternatives must be approved by UES during the design.
9. All suspended cooling coil equipment, except for wall hung mini splits, shall have secondary independently supported drain pans with minimum 24 gauge galvanized steel construction with welded seams and minimum 4" overhang all around the unit. The p-trap and unit supports shall also be located completely over the secondary drain pan. All refrigerant based systems shall have overflow prevention controls.
10. Floor mounted cooling coil equipment shall have

secondary drain pans where no area room floor drain is readily available.

11. Compressors shall be provided with a 5 year minimum warranty.
12. Refrigerant system shall be leak tested on site with nitrogen inert gas and witnessed by UCF Facilities Operations or UES Staff. Test shall be minimum 300 microns at 3 minutes, 500 microns at 5 minutes, or as recommended by the manufacturer.
13. DX units shall be evacuated per manufacturer recommendations on site and witnessed by Facilities Operations.
14. All recirculation loop lines shall be cleaned and flushed prior to final connections. Flushing and cleaning plan shall be approved by FO during design.
15. Floor mounted DX type units shall be set on non-adsorbent floor finishes including a minimum 36" workspace border.
16. Ducted cooling coil equipment shall be provided with ultraviolet (UV) disinfection lighting in the UV-C bandwidth as noted in the filtration section.
17. See other sections of this division for additional criteria as applicable to AHU's, piping, etc.

System Quality Assurance and Contractor Turnover to Owner

1. **CN23-12: During the construction phase, filters meeting final filters specified shall be provided and replaced when the pressure drop across the filter exceeds ½" of water column or at minimum one (1) month intervals, whichever comes first.**
2. **CN23-13: All filters shall be replaced on the day of final completion. The Contractor shall provide the Owner two additional sets of filters for each unit.**
3. **CN23-14: The contractor shall provide the Owner with two additional sets of belts for each belt-driven unit.**
4. **CN23-15: The Contractor shall perform cleaning of all air handler units, including coils and ductwork just prior to final completion filter replacement.**
5. **CN23-16: The Contractor shall perform cleaning of all DX equipment, including evaporator and condenser coils, just prior to final completion of filter replacement.**

References:

ANSI/ASHRAE Standard 52.2-2012, Method of Testing General Ventilation Air Cleaning Devices for Removal Efficiency by Particle Size https://www.ashrae.org/ standards-research--technology/ standards-addenda

ANSI/ASHRAE/IES Standard 90.1-2013 Energy Standard for Buildings Except Low-Rise Residential Buildings

http://www.ashrae.orgp5

Florida Building Code, Energy Conservation 2010 http://www.floridabuilding.org

THIS PAGE INTENTIONALLY LEFT BLANK

25

Division 25 - Integrated Automation

This section contains:

Integrated Automation

Commissioning of Integrated Automation

Unified Building Systems

BAS Updates

Integrated Automation

The latest Building Automation System Specification provided by the Department of Utilities and Engineering Services may be accessed through a link here: https://fp.ucf.edu/_resources/standards-and-requirements/

Commissioning of Integrated Automation

See Section D.1 Commissioning.

Unified Building Systems

BAS retrofits in existing buildings shall match the predominate manufacturer already in place, or as directed by Utilities and Engineering Services during design. Unified building systems shall be maintained or achieved where at all possible. Where a renovation will affect more than 75% of an existing BAS, the full system shall be upgraded and or unified.

BAS Updates

To maintain accurate BAS interfaces, any renovation that modifies floor plans or room numbers shall provide corresponding updates to the BAS graphics, floor plans, and programming for the affected area.

THIS PAGE INTENTIONALLY LEFT BLANK

26

Division 26 - Electrical

This section includes:

Introduction

Section I - General Standards

Equipment Location

Common Work Results for Electrical

Ducts and Raceways for Electrical Systems

Boxes, Receptacles, Switches and Associated Materials

Electrical Identification

Engineering Power Studies

- **Engineering Power Study Requirements**
- **Protective Device Coordination Study**

(cont'd on Page D.26-2)

Introduction

This section includes electrical standards for wire & cable, raceways, electrical identification, monitoring, control and distribution, programming, transformers, panelboards, wiring devices, breakers and switches, lighting, and emergency power.

Section I - General Standards

These standards apply to all projects. Additional standards for individual project levels are listed in SECTION II - LEVEL SPECIFIC STANDARDS.

All abandoned, permanently disabled, or non-functional equipment and associated components shall be fully removed to the furthest extent possible and all support utilities properly capped and terminated. It is the responsibility of the installing department, where applicable, to pay for any costs incurred. Renovations shall include full removal of all such equipment within its scope.

Every new building shall be serviced by dedicated separate mechanical, electrical, and plumbing systems to be isolate-able and to operate independently. Where building additions are planned, consult with facilities to determine the best option for the service capacity needed, and coordinate updates to existing main feeds and signage to reflect added services and emergency disconnects.

See the UCF IT Telecommunications Design Standards and the University of Central Florida Building Automation System Specification for additional requirements.

Equipment Location

1. Dedicated rooms shall be provided for each of the following: electrical, telecommunications, mechanical, elevator, and custodial. Each room's access shall be located directly off a main corridor or common area, with no spaces in between.
2. Building occupant equipment and equipment support spaces shall be separate from all facilities building support areas.

Common Work Results for Electrical

1. Exposed electrical raceways, wire mold, and conduit (including, but not limited to electrical, telecommunications, access control, and/or cable TV) routed on any exterior portion, or in any finished interior portion of a new or remodeled building, is prohibited with the following exceptions where approved in advance by Facilities Operations:
   - Raceways and conduits in open ceiling designs.
   - Industrial applications with exposed structural framework, service yards and mechanical spaces that are not within public view, concealment to be provided where available.
   - Incidental flexible connectors at furniture systems, moveable components and similar final equipment terminations.
   - UCF IT low voltage data cable raceways.
   - Surface raceway systems approved in advance by Facilities Operations through approved devices, fittings or knockouts supplied as part of a complete, approved raceway system.
2. Where allowed, surface conduit and similar raceway materials shall be specified with integral or applied finishes to match area aesthetics and adjacent surfaces. Surfacemounted raceway systems shall allow for maintenance without disassembly of the complete system. Raceway systems shall be fed from an accessible box, and mounted over a recessed box in the wall.
3. All empty conduits must contain a polyolefin pull line-JET LINE #232 or approved equal, with engraved metal tag at each end indicating conduit designation.

Division 26 Contents

(cont'd from Page D.26-1)

- **Fault Current Study**
- **Arc Flash Protection Study**
- **Study Report**
- **Arc Flash Hazard Label**

Commissioning of Electrical Systems

Electrical Transmission

Motors and Low Voltage Controllers

- **Variable Frequency Drives (VFD)**

Facility Electrical Power Generating and Storing Equipment

- **Emergency Standby Power Generation**
- **Uninterruptible Power Sources (UPS)**

Facility Lightning Protection

Lighting

- **Interior Lighting**
- **Guidelines for Large Volume Spaces**
- **Control Devices - Daylighting**
- **Warranty**

(cont'd on Page D.26-3)

4. Prior to saw cutting or core drilling, the area shall be certified clear of embedded electrical wiring.

Ducts and Raceways for Electrical Systems

UNDERGROUND

1. Direct burial electrical wiring is prohibited.
2. All underground primary wiring raceways cover shall meet NEC and utilize excavatable flowable fill coverage with a minimum of 6" coverage above top of conduit. Underground secondary wiring raceways shall have minimum cover as required by the NEC.
3. All underground ductbanks shall be designed, configured and installed to eliminate standing water, directing drainage to manholes, pullboxes, switchvaults, etc.
4. A minimum of one spare conduit, equal to or larger than the largest specified size, shall be provided and stubbed up above slab with weather tight capping inside the main electrical room.
5. Conduit support saddles for steel-reinforced concrete raceways shall not be spaced over six feet (6') apart.

ABOVEGROUND

6. All through-building conductors shall be installed in approved raceways with the exceptions noted above.
7. **CN26-1: Metal conduit of a minimum of three-quarters of an inch (3/4") with compression fittings shall be used in the interiors of all buildings except in walls as listed below.**
8. PVC conduit is prohibited in building interiors.
9. Concealed metal flexible tubing or MC cable for other than UCF IT low voltage is limited to twenty (20) foot maximum length within a single room, and is allowed only in walls when fed from overhead 3/4" metal conduit. Flexible tubing or MC cable is not allowed to span room to room. All branch circuits must be in 3/4" metal conduit.
10. For HVAC equipment installations inside chiller plants, galvanized rigid conduit shall be provided. Electrical Metallic Tubing (EMT) is prohibited in these applications.
11. Flexible conduit shall be steel or aluminum, with a diameter of 3/4", except where supplied by a manufacturer with a lighting fixture or as part of a pre-manufactured wiring system. Separate green grounding conductors shall be installed in ANY length of flexible conduit.
12. All conduit for low voltage other than fire alarm and BAS which are permitted to be minimum ¾" must be a minimum of one inch (1") in diameter. See the UCF IT and BAS standards for additional information.
13. Cable trays shall be adequately sized for a minimum of 10% future additions. Cable trays shall be installed as high as possible, but beneath ductwork. Installed cable trays shall be accessible at all locations. Trays shall be installed with a cover only where physical protection of the installed cables is required, and where accessible. Separators between different types of services shall be provided.

Boxes, Receptacles, Switches and Associated Materials

1. Back-to-back and through-the-wall boxes are prohibited. When boxes share the same partition, they shall be offset a minimum of twelve inches (12") for sound attenuation.
2. Access shall be provided to boxes without removing equipment or furnishings.
3. Boxes above/below suspended ceilings shall be "accessible" per NEC. They must be: accessible from below or aside, and the access opening may not be less than eighteen inches (18") from a duct or structural component (excluding the ceiling grid). Junction boxes located above ceiling shall be installed facing down and shall be accessible after installation.
4. All boxes must be installed with flush faces in finished areas. The back of recessed boxes with up to one extension ring shall be set at minimum

Division 26 Contents

(cont'd from Page D.26-2)

Exterior Lighting

Enclosed Switches and Circuit Breakers

Molded-case Circuit Breakers

Section II - Level-specific Standards

four inches (4") into a wall (finished/furred out or not). Multiple extension rings shall not be installed on one box in finished walls. Extension rings shall not limit access to the back of the box, except for a trim ring. Boxes shall be sized so extension rings are not needed where at all possible.

5. All cover plates shall be high-abuse-resistant nylon or stainless steel.
6. For any location where the type and quantity of devices on a circuit are known to be a significant source of harmonics, neutrals for receptacles on circuits that feed offices shall not be shared by different circuits.
7. All boxes in refrigerated areas shall be sealed at points of entry to prevent thermal leaks and condensation.
8. Vending areas shall be supplied with dedicated electrical and data outlets at four foot (4') on center intervals along walls against which vending machines will be located. Locations and specific needs must be coordinated with Business Services. If a copier is being provided, data is required as well.
9. All classrooms shall be provided with a receptacle for a wall mounted clock approximately seven feet (7') above the floor towards the front of the viewing area or in a location compatible with the room use.
10. GFCI protection shall be provided for all electrical outlet connections within six feet (6') of wet sinks and other wet locations.
11. Office-type spaces shall be provided with a minimum of two duplex receptacles, one of which must be coordinated so that it is adjacent to the desk within the room. The duplex receptacle serving the desk cannot be on an occupancy sensor. Large storage rooms shall be provided with at least one duplex receptacle per usable wall. Lobbies and study areas shall be provided with power access spaced maximum twelve feet (12') apart.
12. Corridors without room for seating must have receptacles installed at a maximum of every fifty feet (50'). Receptacles shall not be provided within stairwells.
13. Corridors with room for seating shall have receptacles installed at a minimum of every twelve feet (12') on center.
14. Outside utility receptacles are required at a minimum of one (1) per wall, located thirty inches (30") above finished grade.
15. Receptacle access shall be provided on roof landings accessible by fixed stairwells. Receptacles shall be provided at one hundred feet (100') on center intervals on the roof area.
16. All common faceplates, switches, and receptacles shall be office white in color and unbreakable rayon. Generator circuits shall be red in color and unbreakable rayon, with the circuit engraved in the faceplate.
17. Mechanical, electrical, and telecommunication rooms shall have two (2) dedicated quad receptacles located in proximity to the main entry door, with others located as directed. Electrical rooms require one (1) standard telephone jack located in proximity of the main entry door.
18. Floor service, electrical, telephone, or similar outlets shall be of a flush-mounted type. Flush brass cover plates are preferred but alternative homogeneous metal styles may be considered to match area finishes where approved by the owner in advance. Painted boxes are not acceptable. Boxes shall be located away from pedestrian paths or be provided with a self-closing or otherwise securable lid to prevent trip hazards.
19. All lighting switches and wall outlets shall have a lifetime warranty.
20. All conductors and pull wires must be stranded copper, with the exception of lighting fixture internal wiring.
21. **CN26-2: All conductors in cabinets must be carefully formed and harnessed so that each conductor drops off directly opposite to its terminal.**

22. Provide an insulated grounding conductor in all feeder and branch circuits.
23. Crimp-type connectors shall only be used on stranded wire.
24. Conductors for 120/208 volt shall be black/red/blue and white. Conductors for 277/480 volt shall be brown/orange/yellow/gray.

Electrical Identification

1. All switch plates, receptacle covers, and junction box covers shall be identified by panel number and circuit number. Switch plates and receptacle covers shall be marked on the reverse by indelible ink and junction box covers marked on the front with indelible ink. All rayon plates shall be engraved.
2. A comprehensive identification system shall be provided for all conduits, panels, rooms, and equipment.
3. All emergency and exit lighting fixtures shall be identified and permanently labeled (not with a permanent marker pen) with an applied numbering system. The numbering system shall be provided by the Owner in a Design Workshop.
4. A detailed signage package that includes disconnecting methods shall be provided where portions of a building remain energized independently.
5. An approved means of access shall be provided to all controls, cabinets, equipment, valves, and similar serviceable items hidden above ceillings and in concealed spaces. The item shall be shall be identified by permanently applied printed labels at the point of access with letters not less than 0.5” in height where required by code and reasonably legible from adjacent grade access. Verify style of label preferred with the project manager for aesthetic applications.

Engineering Power Studies

Prior to final approval of equipment shop drawings, various Engineering Power Studies shall be performed. These include: Protective Device Coordination Studies, Power System Studies, Fault Current Studies, Load Calculations, and Arc Flash Protection Studies. All shall be performed by the distribution equipment manufacturer or an independent firm currently involved in high- and low-voltage power system evaluation. All studies shall be performed using approved software. An electronic copy of the final study shall be submitted in the format used to perform the study.

ENGINEER POWER STUDY REQUIREMENTS

1. Both new equipment and existing equipment being connected to the new power distribution system shall be included.
2. Data to support system studies shall be gathered and tabulated
3. Equipment designation tags shall be consistent with electrical distribution system diagrams, overcurrent protective device submittals, input and output data, and recommended device settings.
4. Impedance of utility service entrance shall be included.

PROTECTIVE DEVICE COORDINATION STUDY

5. A coordination study shall be performed to support the selection of instrument transformer ratios, protective relay characteristics and settings, fuse ratings, low-voltage circuit breaker ratings, characteristics, and settings.
6. Study the electrical distribution system from normal and alternate power sources throughout the electrical distribution system for the Project. Include studies of system-switching configurations and alternate operations that could result in maximum fault conditions.
7. Calculate momentary and interrupting duties on the basis of maximum available fault current.

FAULT CURRENT STUDY

8. A Fault Current Study shall include both new equipment and existing equipment being connected to the new power distribution system.
9. The maximum available short-circuit current shall be calculated in amperes RMS symmetrical at circuit-breaker positions of the electrical power distribution system. The calculation shall be for a current immediately after initiation and for a three-phase bolted short circuit at each of the electrical system components, including but not limited to the following:
    - Branch circuit panelboard
    - Disconnect switch
    - Distribution panelboard
    - Medium-voltage equipment
    - Switchgear and switchboard bus
    - Transfer switch
    - Variable frequency drive

LOAD CALCULATIONS

10. New and modified electrical circuitry shall be provided with panel load calculations as required by NEC and the University Operations Electrical Panel Load Calculator (EPLC) Procedures, as applicable. Field verification of circuits is required and photos of full panel internal conditions with dead front cover removed shall be provided with the calculations in the design documents.

ARC FLASH PROTECTION STUDY

11. The Arc Flash Hazard Analysis shall be performed in compliance with IEEE Standard 1584, Guide for Performing Arc Flash Hazard Calculations. Using an approved computer software program, Arc Flash Incident Energy (AFIE) levels and flash protection boundary distances shall be calculated. Safe working distances shall be based upon the calculated arc flash boundary, considering an incident energy of 1.2 cal/cm2. The study shall identify recommendations for reducing AFIE levels and enhancing worker safety. In addition, the study shall include the correct settings to avoid nuisance tripping for any arc flash reduction maintenance switch(es).
12. The study shall include both new equipment and existing equipment being connected to the new power distribution system. The study will be performed using an approved computer software program.
13. The arc flash hazard study shall include all significant locations in the electrical distribution system when work could be performed on energized parts. Locations shall include, but not be limited to, the following:
    - Controller equipment such as Variable Frequency Drives
    - Disconnect switches
    - Enclosed Circuit breakers
    - Feeders
    - Lighting and appliance panelboards
    - Motor control centers
    - Panelboards
    - Switchboards
    - Switchgear
    - Transfer Switches
14. The fault current calculations and clearing times of the phase overcurrent devices shall be retrieved from the fault current and coordination study model. Ground overcurrent relays shall not be taken into consideration when determining the clearing time when performing incident energy calculations.
15. The fault current calculations and the corresponding incident energy calculations for multiple system

scenarios shall be compared, and the greatest incident energy shall be uniquely reported for each equipment location. Calculations shall be performed to represent the maximum contributions of fault current magnitude for all normal and emergency operating conditions. Calculations shall take into consideration the parallel operation of synchronous generators with the electric utility, where applicable.

16. The incident energy calculations shall consider the accumulation of energy over time when performing arc flash calculations on buses with multiple sources. Iterative calculations shall take into account the changing current contributions, as the sources are interrupted or decremented with time. Fault contribution from motors and generators shall be decremented as follows:
17. Fault contribution from induction motors shall not be considered beyond 3-5 cycles.
18. Fault contribution from synchronous motors and generators shall be decayed to match the actual decrement of each as closely as possible (e.g., contributions from permanent magnet generators will typically decay from 10 per unit to 3 per unit after 10 cycles).
19. For each equipment location with a main overcurrent protective device, calculations for incident energy and flash protection boundary shall include both the line and bus side of the main device.
20. When performing incident energy calculations on the line side of a main device (as required above), the line side and bus side contributions shall be included in the fault calculation.
21. Arc flash calculations shall be based on actual overcurrent protective device clearing time. Maximum clearing time will be capped at two (2) seconds based on IEEE 1584.

STUDY REPORT

22. The study report shall include pertinent data, procedures, assumptions, results, and recommendation for arc flash hazard reduction. Provide an arc flash hazard evaluation summary listing the following:

    Provide an arc flash hazard evaluation summary listing the following:

    - Bus name
    - Upstream protective device name, type, and settings
    - Bus line-to-line voltage
    - Bus bolted fault
    - Protective device bolted fault current
    - Arcing fault current
    - Protective device trip/delay time
    - Breaker opening time
    - Solidly grounded column
    - Equipment type
    - Gap
    - Arc flash boundary
    - Working distance
    - Incident energy
    - Required protective fire-rated clothing type and class

ARC FLASH HAZARD LABEL

23. Provide a 3.5 in. x 5 in. thermal transfer-type label of high adhesion polyester for each equipment location analyzed.

    All labels shall be based on recommended overcurrent device settings and shall be provided after the results of the study have been approved.

    Each label shall include the following information, at a minimum:

    - Equipment designation
    - Shock hazard when cover is open

- Arc Flash boundary
- Incident energy (cal/cm2)
- Limited approach boundary
- Restricted boundary
- Date of issue
- PPE Level required

The Contractor shall field install arc flash hazard labels.

Commissioning of Electrical Systems

See Section D.1 Commissioning.

Electrical Transmission

This section contains the requirements for equipment and installation relating to the distribution and control of electric power 600 volts and below, including switchgear, switchboards, panel boards, bus ducts, transformers, and motor controls.

1. DProducts shall be chosen for compatibility with existing owner replacement parts supplies that are readily obtainable. The BOD for all switchgear and branch panels shall be manufactured by and labeled as Square D, Siemens, or GE. Substitutions shall only be considered by deviation during design.
2. Danger/Warning labels shall be affixed to each piece of the following electrical equipment, as indicated in NFPA 70 Art.110.16 and NFPA 70E: switchboards, panel boards, industrial control panels, meter socket enclosures, motor control centers, are fused and non-fused disconnects that are likely to require examination, adjustment, servicing, or maintenance while energized.
3. **CN26-3: Dedicated rooms shall be provided for electrical. Each room's access must be located directly off a main corridor or common area.** Electrical distribution rooms shall be stacked and each floor provided with a dedicated room for service.
4. All building service disconnects shall be break glass 30mm operator type.
5. The main disconnect emergency shunt buttons shall be provided on the exterior of the building where the service disconnect is not directly accessible from the outside. The main electrical room shall be on the ground floor near the utility transformer on an exterior wall.
6. Three pole breakers shall be used only for machinery-type equipment.
7. All individual circuits shall have a means of single disconnect (one (1) breaker), and each individual circuit must have its own neutral. This also applies to powered open office furniture systems.
8. Electrical disconnects below 600 VAC that are placed outdoors shall be minimum NEMA 250 Outdoor Type 4X rated stainless steel. Indoor disconnects shall be minimum steel, NEMA Type 1 rated. Indoor areas subject to high dust or humidity, harsh chemicals, or similar hazards, such as found in some research and mechanical spaces, shall be minimum steel, NEMA Type 3 or 3X as appropriate, or as requested by UES during design review. All disconnects shall be capable of being locked. Materials for service loads greater than 600 VAC shall be coordinated with the AVP of UES during design.
9. Electrical switchboards below 600 VAC shall be installed as outlined below by location. Materials for service loads greater than 600 VAC shall be coordinated with the AVP of UES during design. Indoor enclosures shall be minimum steel, NEMA Type 1. Areas subject to high dust or humidity, harsh chemicals, or similar hazards will require a higher NEMA rating as requested by UES for specific locations during design (BOD manufactures stated above apply). Indoor enclosures shall include the following:
    - Switchboard framework is to be formed, cold gauge steel, rigidly welded and bolted together to support all

cover plates, bussing, and component devices during shipping and installation.

- Each switchboard section shall have an individual removable plate for installation and termination of conduit.
- The wireway front covers are to be hinged to permit access to the fusible switches load side terminals without removing the covers. All front plates used for mounting meters, selector switches, or other front mounted devices shall be hinged with all wiring installed and laced with flexibility on the hinged side.
- All closure plates shall be screw removable.
- The enclosure and closure plate finish shall be factory-applied manufacturer's standard gray over a rust-inhibiting primer on treated metal surface.

Outdoor Enclosures shall be minimum NEMA Type 3R, additional ratings may be requested by UES during design, should site conditions warrant it, with the following details:

- Steel other than stainless shall have factory-applied finish in manufacturer's standard color; undersurfaces treated with corrosion-resistant undercoating.
- Downward, rearward sloping roof; bolt-on rear covers for each section, with provisions for padlocking.

10. Variable frequency drives shall not be placed outdoors.
11. The electrical system shall be 277/480V, 3 phase, 4 wire, with a 120/208 V, 3 phase, 4 wire sub-feeder. **CN26-4: All mains, feeders, and branch circuit panels shall be of the bolt-on circuit breaker type. A neutral wire is required for all circuits.**
12. All service power shall be 480/277V into the building main. Power shall be distributed as follows: Lighting shall be 277V, and user power shall be 120/208V.
13. All electrical service to roofs shall be through the HVAC curbs or through the exterior walls. Roof penetrations are prohibited.
14. Conduits into the buildings for fire alarm monitoring and HVAC control and monitoring shall be provided. Two (2) two-inch empty spare conduits below grade for each major exterior wall with a pull string shall be provided and capped for future use.
15. The location of electrical transformers shall be thoughtful and not diminish the overall aesthetic appearance of the building. Locating the transformers at the main entrance or along the primary building facade is prohibited.
16. All electrical panels shall have easy access. All panels shall have exterior identification and arc flash calculation signage, and all breakers must be numbered and identified as to room number served by a plastic covered index. Circuit breaker panels shall be lockable, specification-grade, with full-size copper busses braced for maximum available fault current and have bolt-on breakers, ground bar, and isolated ground bar.
17. **CN26-5: The entire front trim of panelboards must be hinged to the box and with a standard door within the hinged trim cover. Trims must cover all live parts and must have no exposed hardware.**
18. All dry type transformers must have 220 degree Celsius insulation or better and must have guaranteed sound levels of: 0-9 KVA - 40 Db; 10-50 KVA - 45 Db; 51-150 KVA - 50 Db; 151-300 KVA - 55 Db; 301-500 KVA - 60 Db.
19. Where research operations require local or emergency disconnect, easy access shall be provided within or adjacent to the research space and separate from the building electrical panels and electrical rooms.
20. An additional watt per hour meter shall be provided for each building from the construction budget. The meter and base shall be ordered by Utilities and Engineering Services and delivered to the Contractor and will be installed by the electrical subcontractor.
21. Any E&G spaces occupied by non-E&G entities shall have a separate panel for all equipment service in their space.

For accurate metering there will be no shared panels with E&G.

22. Sprinkler system piping shall not be used for electrical grounding.
23. Each building electrical main shall be provided with a grounding system that is 5 ohms or less. A written record of the test results shall be prepared and signed by the Contractor and UCF Project Manager and submitted to the Architect and Engineer.
24. All Main Distribution Panels and main subpanels shall have Transient Voltage Surge Suppression (TVSS).
    - Category C3 for Service Entrance, 150,000A minimum total surge current/phase.
    - Category B3 for Distribution Equipment and panel boards.
25. The connected electrical load in any building shall be corrected to 95 percent power factor or above, using automatically controlled capacitors where required.

Motors and Low Voltage Controllers

1. Motors shall conform to applicable portions of NEMA Standard MG-1, Motors and Generators. Reduced voltage starters shall be provided for all motors that are 15 horsepower and larger.
2. High-efficiency and high-power factor motors shall be used in all cases. Variable frequency drives with both, HMI, and BACNet communications modules shall be used for all motors. Motors shall be sized for the application such that when the driven equipment is operated at rated capacity, the motor current will not exceed the full-load current on the nameplate. Service factors shall not to be used in normal operation.
3. Motors shall be open, drip-proof or totally enclosed, fancooled, as shown on the drawings. Motors shall have cast iron frames with cast mounting feet. Motors shall be three-phase, 60 hertz, 1800 rpm, rated at 200 volts for 208-volt systems, 230 volts for 240-volt systems and 460 volts for 480-volt systems. 230/208-volt motors are prohibited on 208-volt systems. Motors shall be NEMA Design B and shall have a1.15 service factor at 60 Hz.
4. In fixed-speed applications, motors shall have Class B insulation with 80 Deg. C rise over 40 Deg. C ambient. For variable frequency drive (VFD) applications, motors shall have Class B insulation with 80 Deg.C rise over 40 Deg. C ambient. The motor manufacturer shall be notified if a motor is being purchased for a VFD application, and the motor nameplate shall be marked, “Suitable for Variable Frequency Drive.”
5. For horizontal, foot-mounted, NEMA frame motors, the motor efficiencies shall be based on IEEE-112, 1984, Test Method B, as specified in NEMA Standard MG1-12.53.
6. Specialty motors such as C-Face, multi-speed, and vertical pump motors shall meet the above efficiency requirements where possible. If motors meeting these efficiencies are not available, “Premium Efficiency” motors shall be provided. Motors 2 5 H P and larger that are to be installed outdoors or in other high humidity areas shall be equipped with silicone rubber space heaters. Space heaters shall be energized when the motor is de-energized. All motors that are 15HP and larger shall have reduced voltage starters.
7. Overload protection shall be provided for each motor. This protection may be an integral part of the motor or may be part of the motor controller and shall interrupt each ungrounded conductor. Three- phase motor protection shall ensure that all three phases are interrupted with the loss of any one phase. Solid-state overloads shall be provided for poly-phase motors. The Contractor will set overloads at start-up.
8. The Contractor shall verify actual size and location prior to installing and connecting wiring.
9. The Contractor shall verify and make any necessary adjustments to service, branch circuit wiring, branch circuit protection, overload protection, disconnect, and controller (starter), based on the motor nameplate data.
10. The Contractor shall provide required copies of the nameplate data sheet for each motor.

11. Nameplate data sheets shall be typed or neatly printed and must include all data on the motor nameplate, plus a unique motor description such as, “AHU-3 Fan Motor”, “Distribution Pump #1”, or similar description.
12. The Contractor shall field verify system voltage prior to ordering or installing any motors.
13. Contractor shall submit manufacturers’ standard product data sheets for each model of electric motor, variable frequency drive (VFD), and low voltage controller, to the Director of Facilities Operations for approval.

VARIABLE FREQUENCY DRIVES (VFD)

1. VFDs must provide a minimum of 6 user-programmable digital inputs.
2. Hardwired feedback control signals must be provided.
3. VFDs must be designed to limit the output current to the motor and assure that it will never exceed the Drive’s input current.
4. Appropriate signal filters when load side wiring exceeds maximum recommended length must be provided.
5. Disconnect switches mounted on the load side of the VFD between the drive and the motor are not permitted.
6. VFDs must be installed in a conditioned space, and the VFD must be UL Plenum rated.
7. A BACnet network card must be integrated into the VFD.
8. Purchased VFD must come with a minimum of 2-year warranty with onsite vendor-provided startup assistance provided.

Facility Electrical Power Generating and Storing Equipment

EMERGENCY STANDBY POWER GENERATION

1. The electrical capacity shall be sufficient to operate life safety equipment and at least one elevator.
2. Generators shall be sized at 200 kW or less. Projects that require stationary generators greater than 200 kW are subject to air permitting.
3. Departments requesting generators greater than 200 kW and loads supporting non-life safety systems shall be advised that all costs associated with these systems, such as permitting, emissions testing, additional maintenance, re-certification, etc., are the responsibility of the department.
4. An air construction permit issued by the Orange County Environmental Protection Department (OCEPD) is required prior to ordering generator equipment greater than 200 kW. Generator information (size, fuel type, location, and manufacturer cut sheets) must be provided to EH&S at least six (6) months prior to the anticipated order date. **CN26-6: The generator cannot be ordered until an air construction permit is obtained from OCEPD by EH&S.**
5. The OCEPD may assess fines if a generator is ordered prior to receipt of an air construction permit. Department project funding will cover the fines. After installation and emissions testing of the permitted generator, a final air operation permit must be obtained from OCEPD by EH&S for the installation to officially be considered complete.
6. The generator shall have a kW rating as per design drawings of 277/480V, 3-phase, 4-wire, and 0.8 power factor. The engine must be 4-cycle, water-cooled with a standard mounted radiator, fan, water pump, and fueled with diesel or natural gas.
7. An automatic starting diesel-fueled generator to pick up the building emergency panel through an automatic transfer switch shall be provided. The generator shall have an hour-meter and an automatic “exerciser” in its control system.
8. Automatic transfer switches shall have the capability to detect a phase rotation fault in the connected power source and transfer to the alternate power source.

9. The generator control panel shall contain a main circuit breaker, frequency meter, running time meter, voltage-adjusting rheostat, AC voltmeter with phase selector switch, and AC ammeter with phase selector switch.
10. The control panel shall also include a network card compatible with the Building Automation System.
11. All generators shall be equipped with a remote annunciator located next to the fire alarm control panel, in a common area of the building adjacent to a Fire Department-accessible exit.
12. The automatic transfer switch shall be mechanically held Voltage sensing relays, one-second time delay, test switch, engine starting contacts, adjustable time delay on re-transfer, five minute unloaded running time-delay after re-transfer, spare auxiliary contacts, exercising timer, and time delay for transfer to emergency shall be provided.
13. The fuel tank shall be registered with the FDEP through EH&S. The Department shall submit a storage tank registration form as soon as it has information on the equipment.
14. Departments are responsible for the registration fee if the tank is over 550 gallons. Engines with a fuel tank capacity greater than 550 gallons shall be on an approved FDEP equipment list and inspected by the County at the time of installation and fueling. Installation inspections shall be scheduled with the County twenty-one (21) business days prior to anticipated installation.
15. All diesel fuel tanks shall be skid-mounted, double-walled with self-containment capability, interstitially-monitored, with fuel capacity for 24 hours of run time at 100% load. When the tank capacity exceeds 549 gallons, the registration shall be coordinated with the Owner prior to filling.
16. The generator enclosure shall be located outdoors, provided with a UV and weather-resistant finish and be architectural bronze in color or provided with screen walls and colors as approved by the University Architect. The enclosure shall be sound attenuated. The published combined engine and exhaust source sound level shall be reduced by 25 dBA at a distance of 23 feet in any direction from the enclosure, measured in a free field environment.
17. Acceptable, non-proprietary manufacturers are: Katolite, Kohler, and Onan. Packaged generator sets and auxiliary components are to be obtained through one source from a single manufacturer: electrically operated, rated for continuous duty, and double throw. Main contacts shall be silver alloy wiping action type.
18. Where required by UES or the user group during design, buildings with generator supported critical functions such as research cooling equipment shall be provided with an exterior NEMA 4X stainless steel Single Purpose Docking Station. The location shall be accessible by portable generator equipment with sufficient clearances for long term parking that does not interfere with building or vehicular pathways. Basis of design shall be Trystar with alternatives approved by UES during design.
19. A five (5)-year warranty on parts and two (2)-year warranty on labor shall be provided.
20. **CN26-7: The State Fire Marshal or his designated representative shall be present to witness the on-site acceptance and load-bank testing.** The generator shall be tested under load, in conjunction with any UPS system installed in the building.
21. For the period of one (1) year from the date the building is finally accepted, the installing Contractor shall be responsible for all NFPA 110 quarterly required inspections, maintenance, and testing of the emergency generator. Coordination and scheduling of the system inspections and tests shall be done through the Owner. Records of such activities must be maintained for the duration of the first year, at which time copies must be turned over to the Owner.

UNINTERRUPTIBLE POWER SOURCES (UPS)

22. Capacity shall be 30% above design load, with the ability to carry this capacity for a minimum of 3 hours.
23. Batteries shall be sealed-cell type.
24. A by-pass shall be installed, external to the unit, so that the entire unit can be isolated for maintenance or repair. All switching shall be done without detectable distortion of output waveform.
25. The unit shall have a means of internal diagnostic checking and externally-provided, web-enabled diagnostics.
26. UPS shall provide positive means to prevent connection of inverter output with line (i.e., to prevent back-feeding) and the ability to provide diagnostics externally.

Facility Lightning Protection

1. A complete lightning protection system with a UL Master Label shall be provided.
2. All wiring shall be compatible with the proposed or existing roofing type.
3. Wiring below grade shall be installed at a depth of eighteen (18) inches or deeper.
4. Air terminals shall be ten inches high (10”), ½-inch in diameter with rounded points.
5. Connections shall be exothermic weld.
6. Ground rods shall be twenty feet (20’) sectional copper-clad steel rods, ¾-inch in diameter.
7. The installation shall include theft preventative coverings for all accessible exposed conductors.

Lighting

This section contains the requirements for equipment and installation related to interior, exterior, and special lighting applications. Lighting equipment and layout must be coordinated with other building design features. The finish and color of surrounding surfaces and equipment must be selected for reduced glare, increased reflectivity, and acceptable brightness balance. The UCF Project Manager and Director of Facilities Operations shall approve all lighting.

1. All lighting controls shall be tied into the campus energy control system.
2. Maintenance equipment for fixtures higher than 10 feet shall be included in the furnishings and equipment project budget and turned over at final completion to the University.

INTERIOR LIGHTING

3. Interior cove lights located adjacent to walls that are intended to wash walls with light are prohibited.
4. All light fixtures in stairways shall be mounted above the landings and on the walls in a service accessible manner no higher than 10’ from a landing and be reachable by a maximum 12’ A-Frame ladder verified to fit on a flat landing surface. All fixtures shall be wired for emergency lighting and have an easily accessible test switch.
5. Occupancy sensing technology shall be installed in all classrooms, offices, and hallways. In addition, **CN26-8: automated light harvesting technology shall be installed in all spaces which receive natural lighting.**

   Control of interior lighting in classrooms, offices, utility closets, restrooms, and corridors shall be distributed, occupancy-based control. Multi-level switching shall be provided in classrooms and offices to allow at least two lighting levels. Classrooms and meeting rooms may have more than two lighting levels, depending on A/V needs. Occupancy-based control shall be dual technology, at a minimum.

   Where dimming is required in rooms that require switching, systems shall be controlled with Crestron ® control switches. These units shall be used with the Crestron ® control systems that are installed in multimedia

classrooms and conference rooms.

Centralized lighting controls shall ultilize BACnet protocol for communications.

6. **CN26-9: Emergency lighting and illuminated exit signage shall be on centralized circuits to facilitate monthly testing All exit signage fixtures shall be LED-type. Radioactive source signage is prohibited.** Emergency lighting shall be provided at all emergency system control panels, main electrical and mechanical spaces, public restroom areas, classrooms, and conference rooms.

   Emergency lights that remain on as "night lights" shall be placed to avoid interference with projection screens, or must be installed with an automatic relay. The relay shall permit darkening of the room when visual aids are being used and still initiate automatic lighting activation during emergency conditions. Where there is a stepped or tiered seating arrangement, minimal lighting levels shall be maintained at floor level without dimming.

   Emergency lighting in stairwells and areas with hazardous materials shall be arranged to have minimal lighting at all times.

GUIDELINES FOR LARGE VOLUME SPACES

7. Indirect lighting minimizes glare on computer screens and creates a soft and inviting environment for concentration on work. Shadows tend to be softer and less pronounced. It is possible to use fewer fixtures with indirect or indirect/direct lighting than with direct lighting alone.

   Typically fixtures are used in areas designed to appeal to sophisticated and discerning people such as in student computer labs, high-ceiling classrooms, architectural featured corridors, large cubical areas, executive conference rooms, and individual offices.

   Typically fixtures are suspended from 10 to 14+ foot ceilings with rods or cables. Features include decorative and geometric forms, with a larger percentage of upward light and lesser portion of direct lighting downward.

   Because of the variety of materials and construction designs for this type of fixturec configuration of these fixtures shall be selected by the Architect before 50% Review meeting and submitted with cut sheets for approval by UCF Project Manager & Utilities and Engineering Services (UES).

8. For ideal optics, consider a smaller down-light direct component of 35% or less to control reflective glare on computer screens. Fixtures may be mounted end-to-end.

9. Percentages of uplight and downlight and the optic materials configuration selected by A/E shall be pre-approved at the 50% Design by the UCF Project Manager & UES. Minimum 22-gauge, cold-rolled steel or extruded aluminum assembly color power painted after fabrication will be used. Polymer forms with mixed in color are also acceptable.

   Light reflective surfaces finished in high gloss or polished material, with 90+% reflectivity.

CONTROL DEVICES - DAYLIGHTING

10. Automatic daylighting control devices used to control lights in daylit zones shall be capable of reducing the light output of the general lighting in the controlled area by at least one half, in response to the availability of daylight, while maintaining relatively uniform illumination throughout the area

11. Areas with clerestory or window walls must have daylighting controls.

12. Approved manufacturers include Hubbell, Leviton, and SensorSwitch.

WARRANTY

13. Fixture: two years against mechanical defects in manufacturing.

14. LED Fixtures: 80% rated light output, 10 Years

15. LEDs and Driver: 5 years, 100% parts

EXTERIOR LIGHTING

16. Building accent, site/pedestrian, parking, and street pole lighting shall be included in the building or project design affecting the area. Building accent lighting power shall come from the respective building's load center. Site/pedestrian, parking, and street pole lighting power shall be fed from a separate dedicated pad-mounted utility transformer and be individually metered for each type of lighting service. Services cannot be combined unless approved by UES. Site/pedestrian, parking, and street pole lighting shall be equipped with surge suppression.

17. New and/or replacement fixtures shall conform to current standards. All exterior lighting must be 480V, three-phase load, balanced, with the exception of building accent lighting, which must be 277V, with a neutral.

    Pole mounted fixtures shall be provided with an in-line local quick disconnect arranged at the luminaire in a loop style and secured for stability. Basis of disconnect design shall be Ideal PowerPlug 103X or similar as approved by FO submittal review prior to installation. Suggested installation illustration provided as outlined at left.

Loop Style Luminaire Local Disconnect

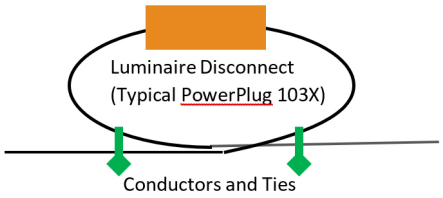

18. Building accent lighting shall be connected to and controlled by the University Operations Intermatic 365 Time Switch system with ethernet capability, zoned by area.

19. Site/pedestrian, parking, and street pole lighting shall be controlled by the University Operations Intermatic 365 Time Switch system with ethernet capability and pole lighting provided with twist-lock type 7-pin form factor photo cell receptacles with a blank cover and surge suppression. Fixture types shall be compatible with Smart Photo Cell technology as direct by UES Smart Infrastructure.

20. Exterior luminaries shall be LED UL, IP66-rated, and have a color rendering index (CRI) of 80 or greater.

21. Lighting mounted to buildings such as building accents and wall packs shall have a color temperature range of 3500 to 4100 Kelvin, unless otherwise noted here.

22. Letter-Light Signs on buildings shall be LED, 4100K warm white with 80-Watt 24V 0-10 DC dimmable power supplies and 175-degree beam angle. Dimming switch shall have the ability to fine tune light with minimum tuning range of 0-10V, and be able to turn off sign completely. Letter light drivers and dimmer shall be located together at the closest available interior building space with adequate service access and concealed for aesthetics where applicable. Product shall have a minimum 5-year manufacturer warranty. Basis of design is Tetra Minimax GEM2441-W1 LED with GE GEPS24D-80U power supply, and Leviton IDP710-DLZ dimmer switch. Alternates must be approved by the owner.

23. All pedestrian walkway and common areas around buildings shall follow the design guidelines found in the Campus Landscape Master Plan. The post top pedestrian lights shall be mounted on a ten (10) foot tapered brushed aluminum pole on a concrete base.

24. All streets and parking lots shall follow the design guidelines found in the Campus Landscape Master Plan. Traffic lighting shall utilize 20-foot, and parking lots shall utilize 30-foot poles. The double or single arm configuration may be used where appropriate. Pole replacements and fixture upgrades are permitted to match the height of existing adjacent area fixtures, with approval prior to ordering from the Director of FO. Where entire areas are reworked every attempt shall be made to standardize area fixture sizes and meet required illumination levels with as few poles as possible.

25. All light poles shall be brushed aluminum, with a concrete base foundation, and fixed pedestal mount. All aluminum pole bases shall match the square (preferred) or round style predominant in the area or as directed by the UCF project manager, with slotted anchor openings. Bases shall be provided with either full plate or knuckle covers with set screws for security.

26. Light pole concrete bases shall be a minimum of four feet (4') from a right of way, and a minimum of two inches (2") and a maximum of four inches (4") above landscape finish grade.
27. Lighting poles shall only be utilized for lighting. Separate poles shall be provided for non-lighting system fixtures and appliances.
28. Pole lighting along streets and within parking lots shall have a color temperature of 4000 Kelvin. Post top pedestrian pole lighting along walkways and in common areas shall have a color temperature of 3000 Kelvin.

Enclosed Switches and Circuit Breakers

MOLDED-CASE CIRCUIT BREAKERS

1. MDP main breakers located and installed indoors shall have a serviceable charging motor installed.
2. General requirements: include UL 489, NEMA AB 1, and NEMA AB 3, with interrupting capacity to comply with available fault currents indicated on the drawings.
3. Include inverse, time-current elements for low-level overloads and instantaneous magnetic trip elements for short circuits in each pole. Include adjustable, magnetic trip setting for circuit-breaker frame sizes 150 A and larger, adjustable from the front.
4. Construct with over-center, trip-free, toggle-type operating mechanisms with quick-make, quick-break action and positive handle trip indication. Construct breakers for mounting and operating in any physical position. Provide breakers lugs AL/CU rated. Lugs shall be adequate to accept wire sizes indicated on the drawings.
5. Include magnetic trip element, with front-mounted, field-adjustable trip setting.
6. Electronic trip circuit breakers shall include field-replaceable rating plug, rms sensing, with the following field-adjustable settings:
    - Instantaneous trip
    - Long- and short-time pick-up levels
    - Long- and short-time time adjustments
7. Single- and two-pole configurations with Class A ground-fault protection (6-mA or more trip and hold below 4mA of ground fault current). One way circuit length shall not exceed 250 feet.
8. With Class B ground-fault protection (30-mA trip), provide as noted on plans and/or panel schedules and for all circuits supplying power to heat trace.
9. Where required to achieve system coordination with upstream and downstream overcurrent devices, provide solid-state circuit breakers. All electronics shall be self-contained and require no external relaying, power supply, or accessories. Printed circuit cards shall be treated to resist moisture absorption, fungus growth, and signal leakage.
10. All electronics shall be housed in an enclosure that provides protection against arcs, magnetic interference, dust, and other contaminants. Solid-state sensing shall measure true RMS current with error less than one percent on systems with distortions through the 13th harmonic. Peak or average actuating devices are prohibited. Current sensors shall be toroidal construction, encased in a plastic housing, filled with epoxy to protect against damage and moisture, and shall be integrally mounted on the breaker. Where indicated on the drawings, circuit breaker frames shall be rated for 100% continuous duty.
11. Circuit breakers shall have tripping features as described below:
    - Long-time current pick-up
    - Adjustable, long-time delay
    - Short-time current pick-up
    - Adjustable, short-time delay

- Short-time I square times t switch
- Instantaneous current pick-up
- Ground fault current pick-up, adjustable from 20 percent to 60 percent of sensor rating, but in no case greater than 1200 amperes. Sensing of ground fault current at the main bonding jumper or ground strap is prohibited. Provide ground fault only where indicated on the drawings.
- Overload and short circuit and ground fault trip indicators shall be provided.

Interrupting ratings shall be as indicated on drawings. Circuit breakers shall be fully rated for available fault current. Series rating is prohibited.

Features and Accessories:

- Standard frame sizes, trip ratings, and number of poles
- Lugs: Mechanical type, suitable for number, size, trip ratings, and conductor material
- Application Listing: Appropriate for application; Type SWD for switching fluorescent lighting loads; Type HID for feeding fluorescent and high-intensity discharge lighting circuits
- Provide the following where noted on the drawings or schedules:
- Ground-Fault Protection: Comply with UL 1053; integrally mounted, self-powered for solid state-type trip units and remote-mounted and powered for magnetic-type trip units with mechanical ground-fault indicator; relay with adjustable pick-up and time-delay settings, push-to-test feature, internal memory, and shunt trip unit; and three-phase, zero-sequence current transformer/sensor.
- Shunt Trip: Trip coil energized from separate circuit, with coil-clearing contact.
- Switchgear and switchboard bus
- Medium-voltage equipment
- Motor-control center
- Distribution panelboard
- Branch circuit panelboard
- Variable frequency drive
- Disconnect switch
- Transfer switch

12. Study the electrical distribution system from normal and alternate power sources throughout the electrical distribution system for the project. Include studies of system-switching configurations and alternate operations that could result in maximum fault conditions.

13. Calculate momentary and interrupting duties on the basis of maximum available fault current.

References:

IEEE 1584 Guide for Performing Arc Flash Hazard Calculations
https://standards.ieee.org/findstds/standard/1584-2002.html

NFPA 70: National Electrical Code 2014 *http://ww.nfpa.org/*

Section II - Level-specific Standards

LEVEL A - LABORATORIES

Lighting

1. The basis for lighting design for replacement of 2 x 4 fixtures is the CREE CR 24 Architectural LED High Efficiency Troffer.
2. The basis for design of LED fixtures for conference rooms is the Lithonia Lighting 2RT5 LED Volumetric Recessed or similar.
3. Color Rendering Index: 85 CRI or better (for non-LED lighting)
4. REQUIREMENTS FOR LED LIGHTING
   - Input Power: 56 watts
   - Correlated Color Temperature: 3500, 4100k
   - Input Voltage: 120-277 VAC
   - Mounting: Recessed, Linear
   - LED modules shall be replaceable and LED power supply boards shall have quick disconnects for easy removal.
   - Color temperature: 3500K to 4000K.
   - LED unit shall provide plug-in style LED arrays and LED power supply boards for easy removal.
   - Recessed LED downlights shall be accessible from below the ceiling.
   - Lifetime: 50,000 hours at 70% lumen maintenance.
   - LM 79 and LM 80 compliant.
   - Passive heat sink integration.
   - Warranty: Minimum 5-year
5. Shall be compliant with LEED NC SSc8 Light Pollution Reduction Requirements.
6. Fixture shall have optical systems for either Type II, III, IV, and V and must produce no light above nadir.

LEVEL B - CLASSROOMS, OFFICES, CONFERENCE ROOMS, AND OTHER ACADEMIC SPACES

Lighting

1. Classroom and hallway lighting shall be lay-in fixtures or indirect pendant-type fixtures.
2. The basis for lighting design for replacement of 2 x 4 fixtures is the CREE CR 24 Architectural LED High Efficiency Troffer.
3. The basis for design of LED fixtures for conference rooms is the Lithonia Lighting 2RT5 LED Volumetric Recessed or similar.
4. Color Rendering Index: 85 or better (for non-LED lighting)
5. REQUIREMENTS FOR LED LIGHTING
   - Input Power: 56 watts
   - Correlated Color Temperature: 3500, 4100k
   - Input Voltage: 120-277 VAC
   - Warranty: Minimum 5-year
   - Mounting: Recessed, Linear
   - LED light source shall provide uniform stable color with a shift of no more than +/- 100K over life of the LEDs.
   - Color temperature: 3500K to 4000K.
   - LED unit shall provide plug-in style LED arrays and LED power supply boards for easy removal.

- Recessed LED downlights shall be accessible from below the ceiling.
- Lifetime: 50,000 hours at 70% lumen maintenance.
- LM 79 and LM 80 compliant.
- Passive heat sink integration.
- Warranty: Minimum 5-year

6. CONTROL DEVICES - OFFICES
   - Each area enclosed by ceiling-height partitions shall have an independent switch in the space and an automatically controlled Occupancy Sensor control device.
   - Bi-level lighting configuration is mandatory.
   - Preferred Devices Infrared (IR) and duel technology Micro phonic by SensorSwitch
   - Preferred Devices Infrared (IR) and Ultrasonic are Hubbell and Cooper GreenGate
7. All classroom lighting shall be designed so as not to interfere with the A/V Systems in the room (i.e., light spill onto projection screens or monitors). Other illumination systems may be required, in addition to the general room lighting (for instance to provide additional lighting at the teaching console). All lighting shall be coordinated with the Office of Instructional Resources (OIR).

- Minimum 5 year warranty.

LEVEL C - RENOVATIONS

Lighting

1. The basis for lighting design for replacement of 2 x 4 fixtures is the CREE CR 24 Architectural LED High Efficiency Troffer.
2. The basis for design of LED fixtures for conference rooms is the Lithonia Lighting 2RT5 LED Volumetric Recessed or similar.
3. Color Rendering Index: 85 CRI or better (for non-LED lighting)
4. REQUIREMENTS FOR LED LIGHTING
   - Input Power: 56 watts
   - Correlated Color Temperature: 3500, 4100k
   - Input Voltage: 120-277 VAC
   - Warranty: Minimum 5-year
   - Mounting: Recessed, Linear
   - LED light source shall provide uniform stable color with a shift of no more than +/- 100K over life of the LEDs.
   - Color temperature: 3500K to 4000K.
   - LED unit shall provide plug-in style LED arrays and LED power supply boards for easy removal.
   - Recessed LED downlights shall be accessible from below the ceiling.
   - Lifetime: 50,000 hours at 70% lumen maintenance.
   - LM 79 and LM 80 compliant.
   - Passive heat sink integration.
   - Warranty: Minimum 5-year
5. Facility's shunt trips and generator transfer will be tested for all major renovations and building additions.

6.CONTROL DEVICES

- Preferred manufacturer devices are to be used as indicated in other sections of this standard.
- Manufacturer shall be permitted to match existing in facilities where an alternate to the preferred has already been applied throughout a majority of the facility.

LEVEL D - HOUSING

Lighting

1. The basis for lighting design for replacement of 2 x 4 fixtures is the CREE CR 24 Architectural LED High Efficiency Troffer.
2. The basis for design of LED fixtures for conference rooms is the Lithonia Lighting 2RT5 LED Volumetric Recessed or similar.
3. Color Rendering Index: 85 CRI or better (for non-LED lighting)
4. REQUIREMENTS FOR LED LIGHTING
   - Input Power: 56 watts
   - Correlated Color Temperature: 3500, 4100k
   - Input Voltage: 120-277 VAC
   - Warranty: Minimum 5-year
   - Mounting: Recessed, Linear
   - LED light source shall provide uniform stable color with a shift of no more than +/- 100K over life of the LEDs.
   - Color temperature: 3500K to 4000K.
   - LED unit shall provide plug-in style LED arrays and LED power supply boards for easy removal.
   - Recessed LED downlights shall be accessible from below the ceiling.
   - Lifetime: 50,000 hours at 70% lumen maintenance.
   - LM 79 and LM 80 compliant.
   - Passive heat sink integration.
   - Warranty: Minimum 5-year

LEVEL E - LEASED PROPERTY (FIVE YEAR LEASES OR LESS)

Lighting

1. A separate electric meter must be installed to service tenant retail spaces within a building.
2. Tenant space lighting controls do not need to be tied into the building automation system.
3. Use of Flexible Conduit is allowed .
4. A separate meter must be installed.

BALLAST AND BALLAST FACTOR (BF)

5. Program-start electronic ballasts (PRS), Class P, thermally protected, sound rated A.
6. Bi-level lighting configuration is mandatory in individual offices and auditoriums.
7. Parallel Lamp operation only.
8. T-8 applications BF of 0.88 to 0.90 preferred; 1.13 is maximum
9. T-5 F54T5HO lamping BF of 1.00 ballast factor is acceptable
10. Instant Start (IS) electronic ballasts allowed for 24/7 lamp operation only
11. Examples of Approved Manufactures include: General Electric, Phillips/Advance or Sylvania
12. Step Dimming allows light level to be switched in several steps for compliance or comfort
13. Analog full range dimming (100% > 5% for T5 & T8) – only if requested by owner for auditoriums and other special applications.
14. Ballast Disconnect shall be OEM or field installed.

LAMPS

15. Preferred sizes are four- and two-foot Linear Fluorescents.
16. All lamps shall be 28 or 25 watt, Extra-Long Life (36,000+ Hrs), with enhanced phosphors and 85+ CRI by GE, Phillips, or Sylvania.
17. Color Temperature is 4100k preferred, and 3500k with Owner's request only
18. TCLP waste stream compliant
19. T5 at 28 watts each or T5HO @ 47 or 49 watts each, new construction and remodeling
20. T-8 shall be 28 or 25 watts each for new construction and remodeling
21. LED is an acceptable light source
22. Unacceptable T8 HO, T-8 - U bend tubes
23. Unacceptable LED's and Driver in a tube as a Linear Fluorescent replacement
24. WARRANTY: Fluorescent Lamp 36 months and ballast 60 months by fixture vendor.
25. The basis for lighting design for replacement of 2 x 4 fixtures is the CREE CR 24 Architectural LED High Efficiency Troffer.
26. The basis for design of LED fixtures for conference rooms is the Lithonia Lighting 2RT5 LED Volumetric Recessed or similar.
27. REQUIREMENTS FOR LED LIGHTING
    - Input Power: 56 watts
    - Correlated Color Temperature: 3500, 4100k
    - Input Voltage: 120-277 VAC
    - Warranty: Minimum 5-year
    - Mounting: Recessed, Linear
    - LED light source shall provide uniform stable color with a shift of no more than +/- 100K over life of the LEDs.
    - Color temperature: 3500K to 4000K.
    - LED unit shall provide plug-in style LED arrays and LED power supply boards for easy removal.
    - Recessed LED downlights shall be accessible from below the ceiling.
    - Lifetime: 50,000 hours at 70% lumen maintenance.
    - LM 79 and LM 80 compliant.
    - Passive heat sink integration.
    - Warranty: Minimum 5-year

27

Division 27 -

Communications

This Section includes:

Telecommunications

General

Telecommunications Designer, Contractor/Installer Qualifications and Warranty

Outside Plant Pathways

- **Conduit Duct Banks**
- **Maintenance Holes (MHs)**
- **Pull Boxes**

Outside Plant Cabling

- **Outside Plant Copper Telephone Cabling**
- **Outside Plant Fiber Optic Cabling**
- **GPS Data And As-Builts**

(cont'd on Page D.27-2)

Telecommunications ~~Design Standards~~

General

1. These standards apply to all projects. Additional Level Specific Standards for individual project levels are indicated where applicable.

2. **CN27-1 Contractors should take note that NO PAINTING OR OTHER SUBSTANCES are allowed on UCF IT data cabling (typically yellow). PAINTING OR OTHER SUBSTANCES on cabling voids the cabling warranty. ANY CABLING WITH PAINTING OR OTHER SUBSTANCES caused by the contractor or his subcontractors will be REPLACED ~~BY UCF~~ AT THE CONTRACTOR'S EXPENSE**. The contractor is responsible for the proper protection of existing and new UCF IT cabling.

3. All low voltage cabling ~~not~~ installed ~~by UCF IT~~ must be installed in a professional manner, using j-hooks or other devices for cable routing and cable management. Non-Ethernet low voltage cabling ~~by the contractor can not~~ shall not share UCF IT cable trays and raceways.

   ~~The UCF IT Telemcommunications Design Standards shall be used to design projects. They are available at: https://it.ucf.edu/~~

4. All telecommunications requirements related to the scope are to be included as part of an overall budget for each project. Some elements of the telecommunications system required by the project occurring off the building site may be provided for in the "infrastructure" portion of the project funds. The A/E/PM must verify the specific project situation in this regard. Additionally, the A/E/PM must remain aware of the constantly changing technology of telecommunications and its impact on the overall construction budget.

5. At the completion of the construction project, all telecommunications systems shall be operational. During the design of the systems, it will be necessary for the A/E/PM to interface with UCF IT and UCF Office of Instructional Resources (OIR) for specific requirements for the project.

6. The information in the UCF IT Telecommunications Design Guidelines is to be considered as the minimum requirements. However, quantities and sizes of items can change during the project design, according to the project's impact and needs.

7. All cables shall be labeled. Coordinate with UCF IT for the latest UCF IT Labeling Standards to be provided for each project.

8. Codes and Standards: all telecom installation tasks shall be performed in accordance with the most recent adopted issue of the following Codes and Standards, in addition to these UCF IT Telecommunications design guidelines. Where there is a perceived conflict between a guideline or standard, the A/E/PM and subcontractors shall follow the chain of command protocol to get the perceived conflict resolved with UCF IT.

   a. NFPA-70 NEC.

   b. ANSI/TIA/EIA-568-1.E Commercial Building Telecommunications Cabling Standard.

   c. ANSI/TIA/EIA-569-E Commercial Building Standard for Telecommunications Pathways and Spaces.

   d. ANSI/TIA/EIA-606-C Administration Standard for the Telecommunications Infrastructure of Commercial Buildings.

   e. ANSI/J-STD-607-D Commercial Building Grounding and Bonding Requirements for Telecommunications.

   f. BICSI Telecommunications Distribution Methods Manual (TDMM) current edition.

9. Additional UCF Policies are available at:

Division 27 Contents

(cont'd from Page D.27-1)

Communications Rooms - Entrance Rooms and Equipment Rooms

- **Communication Room Requirements**
- **Communication Room Cable Trays or Ladder Rack**
- **Relay Rack**
- **Grounding and Bonding**
- **Termination Components**
- **Rebox/Hoffman Solutions**

Inside Plant Pathways

- **Telephone/Data Outlet/ Raceways**
- **Cable Tray Raceway Systems**
- **J Hooks**

Inside Plant Cabling

- **Riser Cabling**
- **Horizontal Cabling**
- **Work Area Outlets**
- **Labeling**
- **Security Camera Infrastructure**

Firestopping

Emergency Blue Light Phones (EBLP)

- **Overview and Types**
- **Installation**
- **Cabling**

g. https://policies.ucf.edu/

h. Telecommunications Services: https://policies.ucf.edu/documents/4-003.pdf

i. Telecommunications Rooms and Vaults: https://policies.ucf.edu/documents/4-013.pdf

j. Radio Frequency Spectrum: https://policies.ucf.edu/documents/4-011.pdf

10. All D.27 referenced figures are located in the Figures section at the end of this division.

Telecommunications Designer, Contractor/Installer Qualifications and Warranty

1. The telecommunications subcontractor and their technicians installing structured cabling shall be factory trained and certified by Belden to install structured cabling in compliance with the Belden Partner Alliance Network cabling program, for 25 Year Extended Warranties.

   a. Link Warranty – includes all telecommunications infrastructure parts from the terminated jack at the wall plate to the terminated jack in the patch panel and everything in between.

   b. Channel Warranty – includes everything the Link Warranty states plus the patch cable at the wall plate to the network device and the patch cable from the patch panel to the switch.

2. The telecommunications subcontractor shall furnish UCF IT with a copy of the BICSI RCDD Certification of their employee on staff associated with the project.

3. The telecommunications subcontractor shall furnish UCF with a copy of a valid Belden Partner Alliance Company Certificate as well as Training certificates of each foreperson, lead technician, and installation technician on a yearly basis.

4. The telecommunications subcontractor shall provide Belden with all test results and all Belden 25 Year Warranty paperwork; to have the structured cabling system they installed to be warranted by Belden per project. The test results and Belden Warranty will then be provided to UCF IT.

Outside Plant Pathways

Pathways and space for telecommunications shall be provided for each project. Components needed for future expansion and connectivity shall be considered, verified and included as directed by UCF IT.

CONDUIT DUCT BANKS

1. The main telecommunications room of any new building shall connect to the UCF campus duct bank system with a minimum of two (2) 4" schedule 40 PVC conduits encased in concrete.

2. New duct banks connecting maintenance holes (MHs) shall contain a minimum of four (4) 4" schedule 40 PVC conduit encased in concrete.

3. Space bars allowing for 2" of concrete between the conduits shall be used.

4. 3000 PSI concrete shall be used to fully encase the conduits with a minimum of 3" of concrete encasing all four (4) sides of the duct bank.

5. A minimum of four (4) #5 rebar shall be installed and epoxied into the MH at MH tie-ins and extend-ed into encased duct bank a minimum of 3'6" to prevent shearing.

6. All MH tie-ins shall be finished by cast in place duct terminators.

7. Concrete pours not continuous must have a minimum of four (4) #5 rebar with a minimum of 24" in each pour as connectors to prevent shearing.

8. A minimum of 36" of ground cover is required above all encased duct banks.

9. A buried "cable tape" shall be placed 12" above the con-

Division 27 Contents

(cont'd from Page D.27-2)

Wireless - Wireless Access Points (WAPs)

Radio Distribution Antenna System (DAS)

Audio Visual Systems (Future)

Figures

crete encased duct bank.

10. The "cable tape" shall be 6" wide and read "CAUTION TELEPHONE CABLE BURIED BELOW". Reef industries #540 "Extra Stretch Terra Tape" is design basis.

11. Where the 4" conduit turns up through the building slab, manufactured rigid metal sweeps with 48" minimum bend radius shall be installed. As the conduit rises through the building slab and enters the telecom room, rigid metal nipples shall be installed as needed, spaced 4" off finished walls and spaced a minimum of 4" apart.

12. Where entrance conduits exceed 50' into the building rigid metal conduit (RMC) or inter-mediate metal conduit (IMC) with threaded couplings shall be used.

13. Test all new conduit runs end to end between MHs, buildings, and stub out points. Testing is to be done by pulling a combination mandrel/stiff spine brush through each conduit. Where the mandrel/brush unit becomes lodged in the conduit, it shall be the contractor's responsibility to recover the mandrel/brush unit and repair the pathway and duct bank damage at no additional cost to UCF.

MAINTENANCE HOLES (MHs)

1. MHs shall be constructed of pre-cast concrete. Typical sizes used at UCF are:
    a. 4'x4' square with 4' of headroom
    b. 5'x5' square with 4' of headroom
    c. 6'x6' square with 4' of headroom
2. MHs shall have a minimum of one (1) 6"x42" diameter pre-cast concrete grade ring installed around the 42" diameter roof access. U.S. Foundry #651 basis of design.
3. A cast iron cover with the word "COMMUNICATIONS" cast into it and pick bars shall be provided for all MHs. U.S. Foundry #CI-SSG basis of design.
4. Install a minimum of 12" of #57 or equivalent rock in de-watered or dry MH pits.
5. Install a minimum of size #6 bare copper (solid or stranded) conductor as the MH is installed. That conductor as installed shall have a minimum 20' coil outside the MH and shall have a minimum 4' coil inside the MH and shall be installed in the following manner:
    a. Two-piece MH: Run the conductor across the bottom half joint before the top half of the MH is set on top of the bottom half.
    b. One Piece MH: Drill a hole just large enough for the conductor to pass through at a point halfway up the inside wall of the MH, then insert the conductor through the hole. Seal the hole with mortar on the inside and outside of the MH.
6. Galvanized steel racking with cable supports shall be installed on each wall of the MH.
7. MHs on the UCF campus are considered secure areas with UCF IT locks and as such any required access must be scheduled with UCF IT in advance.

PULL BOXES

1. Pull boxes shall be constructed of monolithic polymer concrete with an open bottom. Size will be determined by location and situation with UCF IT. See **FIGURE 27-01 TYPICAL PULL BOX.**
2. All pull box lids shall contain "COMMUNICATIONS" on the concrete drive safe lid and be able to with stand 8,000 lbs to 15,000 lbs of pressure depending on the location. **FIGURE 27-02 TYPICAL PULL BOX IDENTIFICATION.**
3. Pull boxes will be buried to complete depth of the box with 6" to 8" of leveled crushed rock installed in the bottom before box is placed in the hole.
4. Conduits shall turn up into the middle of the pull box utilizing a 48" minimum bend radius.

Outside Plant Cabling

The ITS contractor shall install infrastructure cabling, structured cabling, cable supports, equipment racking and support structures, and bonding and grounding components as indicated herein.

OUTSIDE PLANT COPPER TELEPHONE CABLING

1. Install copper PE89 cable as instructed by UCF IT and the design documents through campus duct banks and MHs.
2. Appropriately sized (pair count) 22 or 24 AWG PE-89 DB or Bell Spec. 22 or 24 AWG ANNA type outside plant copper telephone cable shall be installed between the nearest existing copper distribution point having cable pairs available to serve the new project. This installation shall also include standard telecom cable racking installed in MHs as needed, to adequately support cables.
3. Install the copper cabling as one continuous cable run, not containing any splices in MHs or cable vaults with new mule tape for future cable installations.
4. Building entrance protection for outside plant copper telephone cables entering building MDFs shall be composed of building entrance protector units, equipped with a 110-wiring field in and out for single, 6,12,25,50,100, and 200 pair outside plant copper telephone cable entrance facilities. (Circa 188 Type)
5. Building entrance protector units shall be equipped with balanced solid-state modules.
6. All terminated cables shall have bullet bonds installed and all sheaths bonded and grounded.
7. Cables shall be terminated on the same wall as the building entry conduits; no slack coil shall be installed before the lightning protection equipment.
8. Cabling with an over-current exposure, including equipment grounding conductors, shall not be bundled with any non-exposed cabling, or encounter cable tray, a minimum 12” space shall be maintained.
9. All installed cables shall be talk-tested.

OUTSIDE PLANT FIBER OPTIC CABLING

1. Install fiber optic cable as instructed by UCF IT and the design documents through campus duct banks and MHs.
2. Install the fiber optic cable as one continuous cable run, not containing any splices in MHs or cable vaults.
3. Provide 10’ service loops of the cable in certain MHs as directed by UCF IT and on each end of the cable runs.
4. Provide 50’ coils in the last MH before building entrance and/or in the vault associated with the core switch rooms.
5. The outside plant fiber optic cabling installation shall also include standard telecom cabling racking in MHs and telecom room equipment racks.
6. Fiber distribution centers shall be installed into a floor-mounted equipment rack or wall mounted cabinet.
7. Fiber shall be spliced in splice housings as directed by UCF IT in the switch rooms.
8. Fiber tubes and ribbons shall be furcated to protect unjacketed ribbons within telecom spaces.
9. The first half of ribbons within each cable count shall be spliced to pigtails for network use.
10. The second half of ribbons within each cable count shall be labeled, left dark and coiled in the splice house for future use.
11. Strand polarization shall be reversed at the end of cable furthest from the campus core. I.e., strands 1&2 at the switch room would show as strand 2&1 at the building communications room.

12. All installed cabling shall be link-loss tested with a level 3 tester.

13. Label cables as they are installed in MHs.

14. Install MH racking in MHs as directed by UCF IT.

15. Support cables in each MH on racking, routing cables around walls.

16. Mule tape shall be placed as cable is installed to replace existing pull lines for future use.

17. Use appropriate installation methods and devices to ensure that cable jackets are not damaged during cable placement.

GPS DATA AND AS-BUILTS

1. Contractor shall provide accurate as-builts to include location, orientation and depth of all installations.

2. GPS coordinates shall be provided for all components.

Communications Rooms – Entrance Rooms and Equipment Rooms

COMMUNICATION ROOM REQUIREMENTS

1. See **FIGURE 27-03 TYPICAL ENTRANCE ROOM LAYOUT, FIGURE 27-04,** and **27-05 TYPICAL EQUIPMENT ROOM LAYOUT HVAC.**

2. Communication rooms shall be centrally located within the area they serve containing one (1) Entrance Room per building and at least one (1) Equipment Room per floor with one door per room opening to a publicly accessible hallway.

3. A communication room shall not serve an area more than 10,000 square feet.

4. Communication rooms shall be a minimum of 100 square feet in size.

5. Communications rooms shall be wrapped around the room with ¾" AC or better grade plywood and finished with Class A ASTM E84 compliant interior finish rating.

    a. Basis of design shall be Uteck or ReadySPEC Backboards. Alternative manufacturers shall be approved by UCF IT during design.

    b. Install nominal 4'x8' boards vertically at 6" AFF.

    c. Install with the "Good" side exposed to the room.

    d. Finish all exposed edges with medium gray intumescent coating. Basis of design shall be PPG Speedhide 42-7. See Division 9 for additional finish details.

6. Communication room ceilings shall be at least nine feet (9') from floor and open to the deck above.

7. Communication rooms shall have a low-static finished floor, polished or coated medium gray concrete is preferred.

    a. Carpet is prohibited.

    b. VCT if permitted shall be anti-static.

    c. See Division 9 for acceptable materials and additional features.

8. Communication rooms shall have at least one 120V 20A 5-20 quad receptacle on each wall fed by emergency power (where available).

9. Room shall have at least one L6-30R and one 5-20 quad receptacle fed from generator power, where available, and one L6-30R and one 5-20 quad receptacle fed from house power on its own dedicated circuits. The power receptacles shall be installed on Unistrut supported by threaded rod 1' above the top of the relay racks (8' AFF), 24" apart as directed by UCF IT. All power outlets will be labeled back to breaker panels. All power outlets shall have the plug type identified with labeling visible when cords are

installed. See **FIGURE 27-06 COMMUNICATIONS ROOM POWER REQUIREMENTS PER RACK.**

10. HVAC minimum requirements for communications rooms are as below:

    a. Entrance rooms contain UCF provided network electronics generating at least 40,000 BTUs per hour of heat load and are to be cooled at a constant 72 degrees Fahrenheit.

    b. Equipment rooms contain UCF provided network electronics generating at least 30,000 BTUs per hour of heat load and are to be cooled at a constant 72 degrees Fahrenheit.

    c. Split systems shall be mounted above the door for redundancy and coordinated for maximum access and work clearances.

    d. Communication rooms shall be serviced by general building air as well as dedicated HVAC.

    e. HVAC shall be placed to encourage adequate ventilation across all the equipment in the room.

    f. See Division 23 for additional information.

11. A bonding conductor for telecommunications (BCT) shall be installed from the main telecom room to the grounding electrode system. It shall be a minimum of #2AWG at a maximum cable length of 84' terminated with irreversible compression connectors. All bonding conductors shall be sized and installed in accordance with ANSI/TIA607-D.

12. Communication rooms shall not contain other systems which may require entry by services or departments other than UCF IT except for door access control where approved by UCF IT in advance.

13. There shall be no plumbing or HVAC piping, or components allowed within the communication room except as required to service the communication room.

14. Before the installation of network electronics, communications rooms must have finished walls/floors, lighting, HVAC, and complete door hardware secured on only the owners access control and or key system.

15. All finished communication rooms shall be secured with the UCF key system and provided with door access control hardware.

16. Lighting shall be located on both front and rear work areas of rows of relay racks or cabinets and meet ANSI/TIA-569 Standards.

COMMUNICATION ROOM CABLE TRAYS OR LADDER RACK

1. Wrap the cable tray around the perimeter of the communications room at minimum 90" AFF. Where split HVAC units are above doorways and interfere with the cable tray it will terminate on either side of the split unit.

2. The cable tray shall be 18" minimum or increased as needed to accommodate all installed cabling and service loops and shall be supported with triangle brackets every five feet (5').

3. Cable tray shall be used to connect the perimeter cable tray to the relay rack utilizing connector brackets.

4. Cable tray shall be black in color.

5. Cable tray shall utilize Belden UL Classified bonding splices. (Belden Ladder Rack)

6. All cable tray sections not bonded with classified splices shall be bonded with a ground wire jumper utilizing 2-hole terminals and paint shall be removed under all bonding connectors. This applies to areas when adding to existing cable tray systems.

    a. The use of Belden UL Classified bonding splice kits can be used to avoid drilling and paint removal of cable trays.

b. See **FIGURE 27-07 CABLE TRAY BONDING SPLICE KIT EXAMPLES** at the end of this section for the following: Butt-Splice Kit (BLBSU301-15B), Butt-Swivel (BLBSS487-OUB), Junction-Swivel (BLBSS488-OUB), and Vertical-Swivel (BLVBS489-OUB).

RELAY RACK

1. Relay racks shall be installed for communication room terminations and network electronic equipment. See **FIGURE 27-08 RELAY RACK ELEVATION**.
2. Relay racks shall be 7'x19", and 6" or 10" deep cable management style and shall be 40" away from walls in the front and back.
3. UCF IT will determine the size and amount used for each design.
4. Station cables shall be routed in the 6" and 10" built in cable management channels.
5. Relay racks shall be black in color with isolation pads installed between the rack and floor.
6. Relay racks shall be bonded to room halo bonding system utilizing C or H taps.
7. Relay racks shall have locking enclosures installed over copper risers, copper homerun cable terminations and any network electronics if installed in a shared space.

GROUNDING AND BONDING

1. The main grounding bus bar shall be at least 20" in length and any additional bonding bus bars shall be at least 10" in length.
2. All bonding busbars shall be at least ¼" thick and 4" in height with insulating standoff mounting brackets.
3. All connectors to busbars shall be 2-hole irreversible terminals affixed to copper conductors with lock washers.
4. The telecommunications bonding backbone cable (TBB) shall conform to the most recent version of ANSI-J-STD-A607 TBB sizing chart.
5. All equipment grounds shall be at least #6 AWG.
6. A "halo" bonding system utilizing "C" or "H" taps is the preferred bonding method.
7. No hard bends shall be allowed in conductor routing, only sweeping bends.
8. The electrical resistance for the ground wire shall be 5 Ohms or less.

TERMINATION COMPONENTS

1. All copper homerun station cables shall be terminated using style 568B. See **FIGURE 27-09 568B TERMINATIONS.**
2. Modular patch panels shall be used for termination of CAT6A cabling.
3. Modular CAT6A jacks shall be used in patch panels alternating black and then gold. See **FIGURE 27-10 CAT6A REVConnect TERMINATIONS** Belden RVAMJKUBK and RVAMJKUTN.
4. Install one (1) horizontal wire manager above and below each modular patch panel.
5. Vertical cable management for equipment racks shall be 6" vertical cable managers for all standard installations. 3" managers may be used if space is limited. (Belden SCRAL84VCM6X9)
6. Provide two Power Distribution Units (PDUs – Belden 9SG1-121001 and 9SB2- 241008) Provide the PDUs on the relay rack containing owner furnished owner installed network electronic equipment.

REBOX/HOFFMAN SOLUTIONS

1. Entrance/Equipment Room solutions shall be used in appropriate situations as determined by UCF IT when a standard 100 square foot room is not plausible.

2. Interior Rebox or exterior Hoff-man Box shall be used as indicated herein. See **FIGURE 27-11 REBOX SOLUTION** and **FIGURE 27-12 EXTERIOR HOFFMAN BOX**. All others shall be reviewed and approved by UCF IT prior to installation.

3. One (1) 2" or 4" conduit shall be installed to the Rebox/ Hoffman box from nearest distribution point for outside plant infrastructure. Size and number of conduit(s) will be determined by UCF IT.

4. Two inch (2") or four inch (4") conduit(s) shall be installed from the Rebox to ceiling space for homerun infrastructure. Size and number of conduit(s) will be determined by UCF IT.

5. 1.25" homerun conduit(s) shall be installed from each data outlet location to a 12"'x12" weatherproof junction box with 2" or 4" conduit(s) installed from the junction box to the Hoffman Box. Size and number of conduit(s) will be determined by UCF IT.

6. One (1) quad 5R-20 power receptacle shall be installed inside the Rebox or Hoffman Box solutions for any UCF IT equipment or devices.

Inside Plant Pathways

Pathways and space for telecommunications shall be provided for each project. Components needed for future expansion and connectivity shall be considered, verified and included as directed by UCF IT.

TELEPHONE/DATA OUTLET/RACEWAYS

1. Each telephone/data/TV outlet shall be served by 4"x4" square steel outlet box with a minimum depth of 2-1/8" equipped with a single gang mud ring. Install one (1) 1.25" metallic conduit in homerun fashion to the nearest communications room or cable tray for up to 6 cables. Provide minimum 1.5" metallic conduit at seven (7) or more cables.

2. Indoor Emergency Telephone Outlet/Raceway: Provide one (1) 4"x4" square outlet box with a single gang mud ring 44" AFF with one (1) 1.25" metallic conduit from the outlet box to the nearest communications room or cable tray.

3. Emergency Blue Light Phone (EBLP) outlet/raceway: Provide each EBLP an appropriate size conduit for a dual 5-20 GFCI power outlet, plus two (2) 1" conduits to the nearest communications room or cable tray. Coordinate the raceway installation with the concrete base for centered placement according to the installation design and ground rod at determined location. The A/E team shall work with the UCF Office of Emergency Management and the Police Department for locations. EBLP shall be installed in an ADA accessible manner.

4. Outdoor Wireless Access Points outlet/raceway: Provide one (1) 4"x4" square weatherproof outlet box on the exterior of the building sleeved through the exterior wall to a 4"x4" square outlet box inside with a blank cover.

5. Outdoor Security Camera outlet/raceway: Provide 4"x4" square weatherproof outlet box on the exterior of the building sleeved through the exterior wall to a 4"x4" square outlet box inside with a blank cover.

6. Elevator Equipment Room outlet/raceway: Provide4"x4" square outlet box 44" AFF in the elevator control room with one (1) 1.25" conduit from the outlet box to the nearest communications room or cable tray. Provide one (1) 1.25" metallic conduit from the data outlet box to the elevator control panel. UCF IT shall install a dual cable outlet for elevator phones with a single patch cable from outlet box to the elevator control panel.

7. Fire Alarm Circuit outlet/raceway: Fire alarm runs over radio-mesh. In cases with hard wired requirements; provide one (1) 1.25" metallic conduit between the nearest communications room and the fire alarm panel.

8. Building Automated System (BAS) outlet/raceway: Provide one (1) 4"x4" square outlet box 44" AFF to BAS control panel area with one (1) 1.25" conduit from the outlet box to the nearest communications room or cable tray. Provide one (1) 1.25" metallic conduit from the data outlet box to the BAS control panel. UCF IT shall install a dual cable outlet for BAS with a single patch cable from outlet box to the BAS control panel.

9. Floor outlet locations in slab on grade/non slab on grade raceway: Provide one (1) 1.25" metallic conduit from the floor box to the above ceiling space associated with the same floor location. Floor boxes shall be homerun for each location and shall not be "daisy chained". Floor boxes shall be able to accept a "106" or "decora" strap for data.

10. Floor outlet boxes in Slab on Grade shall be Wire-mold/ Legrand-Walker box (RFB4-CI-1) with:

    a. Two (2) CILT-4TKO communication brackets.

    b. Two (2) CILT-D Duplex receptacle brackets.

11. Floor Outlet boxes Non-Slab on Grade shall be Wire-mold/ Legrand-Walker box (RFB4SS) with:

    a. Two (2) RFB-4TKO-SS communication brackets.

    b. Two (2) RFB-RB-SS internal duplex electrical receptacle brackets.

12. Floor box covers shall be Wiremold/Legrand-Walker (S40BBTC) in the finish the architect chooses. See Division 26 for additional required features.

13. All communications conduits shall be brushed and reamed end-to-end prior to cable installation.

14. All wall outlet metallic conduit(s) shall run up in the wall into the ceiling space and be within 4' of the nearest telecommunications pathway system.

15. Conduit(s) shall be run in a workmanship like manner parallel and perpendicular to building structure. Exposed conduit on finished exterior building faces shall be avoided where at all possible. Exterior penetrations visible in public areas shall be sealed weather tight and concealed behind equipment boxes or provided with escutcheon type cover. Visible spray type foam is not acceptable.

16. Standard manufactured components and connections shall be used to provide a secure and maintainable system. Final finishes shall be provided and coordinated with the design of record. See Division 26 for additional features.

17. Metallic conduit(s) shall be grounded in accordance with ANSI/TIA-607-D.

18. A 1.25" metallic conduit serving a workstation outlet requiring more than 270 degrees of bend must be presented to UCF IT. If a pull box is required, it shall be accessible and unobstructed. Conduit(s) shall enter and leave a pull box creating a straight path for cables and not cause the cable to bend within the pull box.

19. Final installed conduit fill ratio shall not exceed Belden fill rates taking pull tension into account. https://tools.belden.com/conduit-capacity-calculator/. Note typical one (1) CAT6A – 10GX13 – Diameter -0.265.

CABLE TRAY RACEWAY SYSTEMS

1. Overhead cabling tray system designed for telecommunications cabling infrastructure shall be provided as a telecommunication distribution system throughout the facility.

2. The cable tray system shall be an open mesh de-sign, also known as a wire basket tray system, that is "UL Classified" and suitable for use as an electrical conductor for grounding and bonding.

3. Cable tray brands approved by UCF IT for use is Snake Tray (Cable Management Solutions).

    a. 801 Series Mega Snake Tray, Mega Snake Under Tray,

b. Series 454 Universal Snake Tray.

c. See **FIGURE 27-13 TYPICAL SNAKE TRAY OPTIONS.**

4. Cable trays installed in an open ceiling environment shall be coordinated with area finishes for both color of tray and color of visible cables and approved by the designer of record and the University Architect. Where selected, paintable removable covers may be used to protect cables from paint during construction and provide a permanent visual break from uncoordinated cable colors.

5. Install cable tray level, straight, parallel, and perpendicular to building structure in above ceiling space 1-1/2' above ceiling grid.

6. Provide all hardware, accessories, fasteners, anchors, threaded rods, and support channels required to provide a complete cable tray system.

7. Cable trays shall terminate at any rated wall and resume on the opposite side of the wall. Hilti speed sleeves shall be installed in the rated wall sized at 50% fill to accommodate the quantity of cables the cable tray is designed to carry.

8. Cable tray shall be hand bendable or have "Bolt on" transition components in "Tee", 45-degree and 90-degree angles.

9. Quick installing splice kits must create both mechanical and electrical bond.

10. No other cable infrastructure shall be permitted to be installed inside or on any UCF IT cable tray.

11. Cable tray shall have 12" of open space for cable access on a minimum of three (3) sides.

J HOOKS

1. Install J Hooks and cable slings to building structures where cable trays are not present and built to support future growth.

2. J Hook and/or cable sling supports shall not exceed 5' of spacing in between.

3. J Hook and/or cable slings shall be rated for use in plenum spaces.

4. J Hook supports may be shared by compatible signal type cables, as determined by UCF IT and depending on the UCF IT cable load. The load will need to be determined by the manufacturer and approved by UCF IT.

5. J Hook support in open areas shall use threaded rod or other similar material for a stable support, grid wire is not acceptable in open ceiling spaces.

6. J Hook supports in accessible ceiling spaces may utilize independent grid wire using nVent Caddy EC311P or equivalent attachment to grid for stabilization.

7. See **FIGURE 27-14 PREFERRED J HOOK OPTIONS**.

Inside Plant Cabling

RISER CABLING

1. Install fiber optic riser cabling as instructed by UCF IT and the design documents.

   a. Fibers that are tight-buffered shall utilize splice-on connectors.

   b. Fibers that are loose tube shall be ribbon and utilize pigtail splices.

   c. Cables shall be labeled on the sheath within 6" of termination.

   d. Cables shall have a 20' service loop on each end.

   e. Minimum strand count shall be 24.

   f. Fiber shall be single-mode.

   g. Termination shall be LC UPC.

h. Factory pre-terminated cable assemblies are acceptable.

i. The use of MTP pre-terminated cable assemblies connected to LC fiber adapter cassettes is acceptable.

2. Install copper riser cabling as instructed by UCF IT and the design documents.

   a. Copper pairs terminated at the Entrance Room end shall be terminated on loaded telco patch panels from main protector 110 block.

   b. Copper pairs terminated at the Equipment Room end shall be terminated on 24 port patch panels leaving the 25th pair unterminated.

3. Copper Tie Cables.

   a. Install four (4) Category 6A tie cables from the Building Distributor to each Floor Distributor.

   b. Terminated on Patch Panels located in the same rack as network equipment and fiber panels.

4. Install hardline coax riser cabling as instructed by UCF IT and the design documents.

   a. .500 Hardline coax cables shall have 5' of slack coiled at each end for termination by CATV prover.

   b. .500 Hardline coax cables shall not be kinked, dented, or rippled.

HORIZONTAL CABLING

1. Install CAT6A homerun cables without splices from the serving floor communications room to the work area outlet.

2. Cabling shall be rated for use in plenum spaces.

3. Cabling shall be properly supported and shall not be tied to or be supported by conduits, pipes, or ducts.

4. UTP cabling installed in cable trays shall not be tightly bundled to allow for heat dissipation caused by POE.

5. Cables shall be secured with Velcro and shall not be secured with zip ties. Service loops shall have minimum of two (2) points secured with Velcro.

6. 3' of slack shall be coiled above each work outlet.

7. Ten feet (10') of slack shall be left in communication rooms place on the cable tray in one large "U" shaped service loop.

8. One (1) loop of service slack shall be left in each wall outlet 4"x4" box.

9. CATV RG6 cabling homeruns shall have no splices from the serving communications room to the TV outlet with a three foot (3') service loop.

10. CATV cabling shall be routed into the CATV cabinet, labeled, coiled, and terminated with RG6 fittings.

11. Minimum of ten feet (10') of coax RG6 shall be left in the communications room, placed on the cable tray in one large "U" shaped service loop.

12. Slab on grade locations shall be fed by cabling rated for damp or wet locations, not plenum rated.

13. Transition points shall be used where conduits do not extend into the communications room from an underground location. Underground rated cable shall be terminated on the back side of the transition point and plenum rated cable terminated on the front side in the ceiling space.

14. Transition points shall consist of Belden REVConnect CAT6A couplers mounted in the junction boxes large enough to enclose the couplers and mounting frames required to mount the couplets and allow for slack management. (Belden RCACPKUBK)

15. All installed cabling shall be tested to category CAT6A specifications with a Level 3 tester.

WORK AREA OUTLETS

1. Faceplates shall be single-gang and not contain more than six (6) cables.
2. Face plates shall be modular Belden brand. (AX1066xx)
3. Faceplates shall have a blank insert with the UCF IT logo in the middle section when space is available. (Belden AX107xxx)
4. Category 6A jacks shall be used for terminations using 568B method alternating black and gold. (Belden RVAMJKUBK and RVAMJKUTN)
5. Coaxial jacks shall be modular and fit within the faceplate insert. (Belden AX10290x)
6. Any unused faceplate space shall have blank inserts installed. (Belden AX10176x)
7. Any unused single faceplate ports shall have a single blank insert installed. (Belden AX1022xx)
8. Wall phone outlets shall utilize faceplates with mounting post. (Belden AX104126)
9. Elevator equipment room phone outlets shall include a tamperproof faceplate and jacks that create a network interface to the elevator equipment for testing purposes.
    a. One (1) single gang four port tamper resistant face plate. (Belden AX104688)
    b. Two (2) jacks in the top two ports.
    c. One (1) blank placed in the bottom two ports.
10. Time Clock/Key Tracker System: two (2) Category CAT6A cables to be installed in the location determined by stakeholder for connectivity.
11. All terminations shall be industry standard 568B.

LABELING

1. Labeling shall conform to TIA-606 and UCF IT standards.
2. All labeling shall be machine generated.
3. Faceplates shall generally be labeled with the UCF IT label hierarchy: **Building#.Distributor#.Rack#.Patch Panel#.Port#**.
4. Outlets in faceplates shall be labeled left to right, then top to bottom.
5. All cables shall be labeled with machine generated labels within 4” of termination behind wall plates and patch panels
6. Patch panel ports shall be labeled with the room number the cables serve.
7. Labels shall also be affixed to the ceiling grid below any outlets located above accessible ceiling spaces with the outlet identification.
8. See **FIGURE 27-15 EXAMPLE IDENTIFICATION**.
9. Provide design detail and submittal for example naming identification for UCF IT review and approval prior to installation.

SECURITY CAMERA INFRASTRUCTURE

1. Internal cameras will be fed with one (1) CAT6A homerun cable terminated with a Belden FlexPlug (RVAFFPUBK18) at the device end.
2. External cameras will be fed with one (1) CAT6A homerun cable with Ditek surge protectors at the device end and communication room end.
3. Physical cameras are to be installed by others.

Firestopping

1. All wall/floor penetrations shall be appropriately fire stopped with an approved firestop system. Hilti is listed here as basis of design. There are two broad categories of firestop: Mechanical and Non-Mechanical (putty, caulk, or sealant).
    a. Mechanical –2" and 4" Hilti Speed Sleeve. (CP 653 BA)
    b. Non-Mechanical – 3M Fire Barrier Putty Pad, Hilti Fire Brick, Hilti Firestop Plugs, and fire wool, or equivalent.
2. Communication rooms shall be provided with speed sleeves to facilitate ongoing moves, add and changes to the IT cabling system. See **FIGURE 27-16 PREFERRED SPEED SLEEVE**.
3. Cable tray firestopping for new construction shall be accomplished by terminating cable tray at the wall to be penetrated, install the quantity of Hilti Speed Sleeves that at 50% fill capacity will accommodate the stated cable capacity of the cable tray, then continue the cable tray on the other side of the wall.
4. Hilti Speed Sleeve fill capacity shall be 50% of either the 2" or 4" sleeve.
5. Conduits terminating in communication rooms shall be fire stopped by using Hilti Plugs or 3M Putty Pads.
6. Cable tray firestopping for existing tray shall be accomplished by using Hilti Firestop Blocks. The wall at cable tray penetration shall be framed around the cable tray to ensure a tight seal and meet fire, smoke and stream ratings.
7. Firestopping for existing cabling that penetrates a wall but is not currently fire stopped shall be by Hilti Firestop Retrofits Sleeves. (Split Sleeve 2" or 4"

Emergency Blue Light Phones (EBLP)

EBLP OVERVIEW AND TYPES

1. The designed location of any EBLPs will be coordinated with the Department of Emergency Management and PD.
2. Gai-Tronics Red Alert VoIP and Analog Phones shall be used on campus with either stand-up stanchion or wall mount style housing. Model will be determined based on location.
3. See **FIGURE 27-17 TYPICAL EBLP STYLES**.

EBLP INSTALLATION

1. The interior of the EBLP shall be installed with product supplied cables, following specific directions located with the product including EBLP phone, lights, grounding, cameras.
2. The EBLPs require a constant and dedicated 5-20 GFCI Quad 120V AC power outlet, on a generator powered circuit where available.
3. The final EBLP, base and unit assembly shall be installed in compliance with ADA accessibility codes.
4. EBLPs bases shall meet manufacturer specifications and engineered details shall be provided addressing the following minimum features:
    a. Install pier flush with grade.
    b. Provide grounding as required by NEC.
    c. Minimum of four (4) anchor bolts are required per base.
    d. Conduits for power and IT shall be installed to the center of the stanchion base. See **FIGURE 27-18 EBLP CONCRETE BASE AND PLATE TEMPLATE** and **FIGURE 27-19 STANCHION BASE CONDUIT CENTERING**.
    e. Details for precast or poured concrete bases meet-

ing FBC wind loads, crushed stone foundation base, and reinforcement cage.

f. Concrete bases shall cure a minimum of 24" prior to EBLP setting.

g. Unless alternative engineering or manufacturer specific details are provided anchor bolts shall be embedded a minimum of nine (9") and extend three (3") to five (5") above the top surface of the pier.

h. Tower hardware, gaps, and assembly shall follow the manufacturer details.

i. See **FIGURE 27-20 TYPICAL STANCHION BASE AND MOUNTING DETAILS**.

EBLP CABLING

1. Stand-up stanchions shall have a quad CAT6A underground grade data outlet installed with a 4-port Ditek surge protector installed at the phone location and communication room for lightning protection. A weatherproof box shall be installed inside the EBLP for data cable terminations.

2. Wall mount EBLPs shall have a dual CAT6A data outlet installed with a 2-port Ditek surge protector installed at the phone location and communication room for lightning protection.

Wireless - Wireless Access Points (WAPs)

1. The wireless network design will be coordinated with the UCF IT Wireless department to develop a wireless heat map survey. The design shall be established to provide 100% high quality wireless internet building coverage.

2. Install a CAT6A dual homerun cable terminated with a Belden FlexPlug (RVAFFPUBK18) at the device end location per the wireless survey completed by UCF IT.

3. External WAPs will be fed with dual CAT6A data outlet with Ditek surge protectors at the device end and communication room end.

4. WAP cabling shall have 20' of slack coiled at the designed location and supported with a figure 8 service loop.

5. Ceiling Grid/Tile Installation: A grid mounting solution shall be installed using a WAP grid plate and grid mounting kit. The ceiling tile installation shall be completed with a flush mount enclosure that is used in replacement of a ceiling tile.

6. Hard Cap Ceiling Installation:

   a. A flush mount WAP enclosure shall be used for this situation.

   b. A template of the enclosure shall be produced to verify accurate dimensions in order to cut out the exact measurements in the hard ceiling drywall.

   c. Install flush mount enclosure to hard ceiling following detailed instructions provided with enclosure.

   d. Mount WAP inside enclosure with provided bracket.

7. Floating WAP Installation:

   a. General contractor to provide one (1) 1.25" conduit from closest communications room or cable pathway to WAP location utilizing a 4"x4" metal outlet box on the end with WAP.

   b. Mount WAP enclosure to the 4"x4" metal outlet box.

   c. Install WAP to enclosure with metal WAP bracket.

   d. Plug in two (2) cables for WAP activation and WAP monitoring.

8. Exterior Installation:

   a. Install seal tight rubber conduit from the general contractor provided weatherproof box to the WAP

exterior wall mount bracket.

b. Run shielded CAT6A patch cables from the Ditek surge protector on the inside of the building through the wall conduit and seal tight conduit to WAP wall bracket.

c. Screw WAP wall bracket to exterior wall with Tap Con screws followed by silicone surrounding the wall bracket for weather protection.

d. Install an exterior model WAP onto the wall bracket.

e. Plug in cables for WAP activation and WAP monitoring.

9. Color wrapping for devices needs to be considered for aesthetic impact.

10. See **FIGURE 27-21 TYPIAL WIRELESS ACCESS POINT STYLES**.

Radio Distribution Antenna System (DAS)

1. Distributed antenna systems may be placed inside buildings for increasing wireless signals on the UCF campus to support cell phone coverage, radios, first responders and public safety.

2. Shall be designed to meet National Fire Protection Association (NFPA), International Fire Code (IFC), Federal Communications Commission (FCC), First Responder Network Authority (FirstNet) and any state or local fire jurisdiction requirements.

3. Each building shall be surveyed using radio frequency (RF) testing equipment to adhere to building coverage code.

4. A minimum signal strength of -95 dBm is required for adequate coverage.

5. System shall operate with an 800 MHX P25 phase 1 trunked radio system and trunked channels transmitting between 850.000-860.000 MHZ and receiving between 805-815 MHZ.

6. UCF IT supports the Motorola XPR6550 two-way radio that meets the FCC mandated narrowband channel spacing of 12.5 and 6.5 MHz.

7. UCF IT performs conformance testing.

Audio Visual Systems (Future)

Figures



FIGURE 27-01 TYPICAL PULL BOX



FIGURE 27-02 TYPICAL

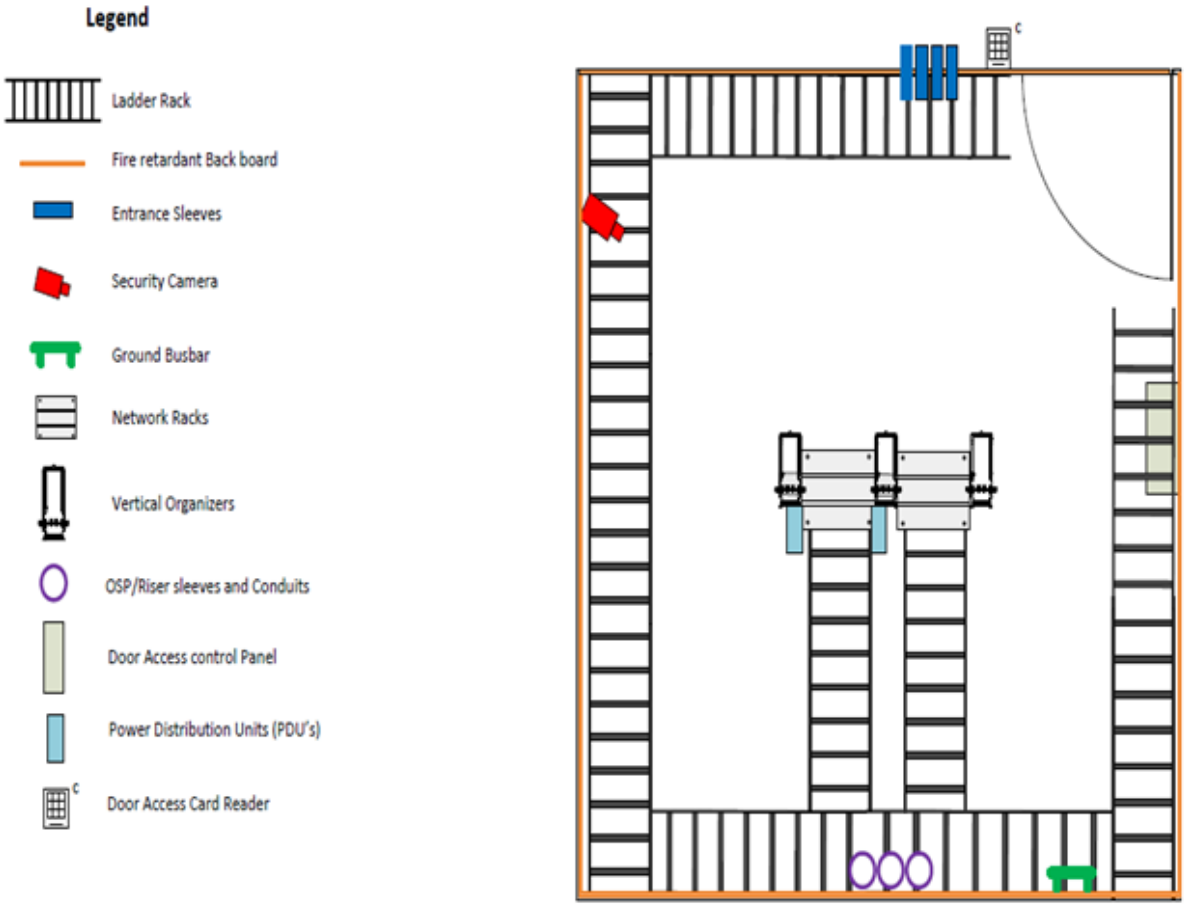

FIGURE 27-03 TYPICAL ENTRANCE ROOM LAYOUT

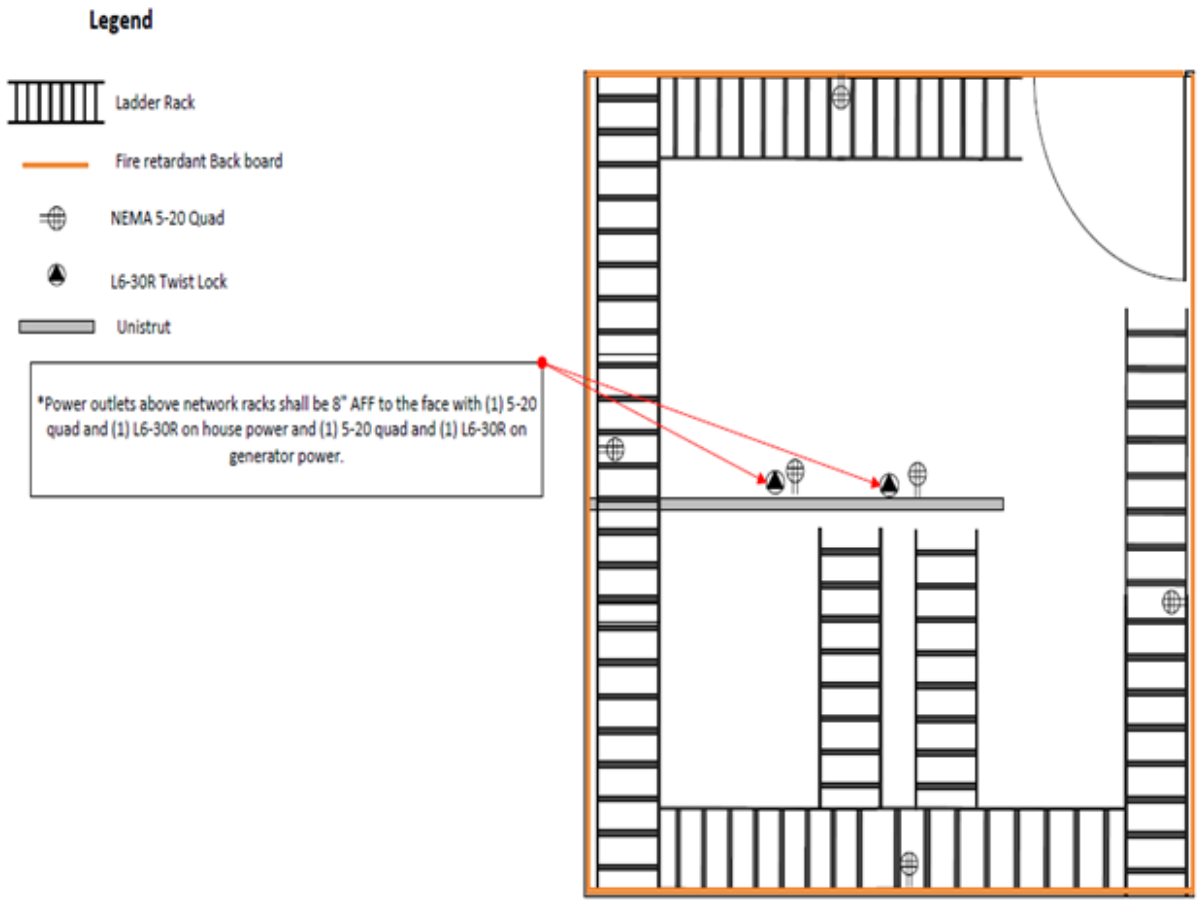

FIGURE 27-04 TYPICAL ENTRANCE ROOM LAYOUT

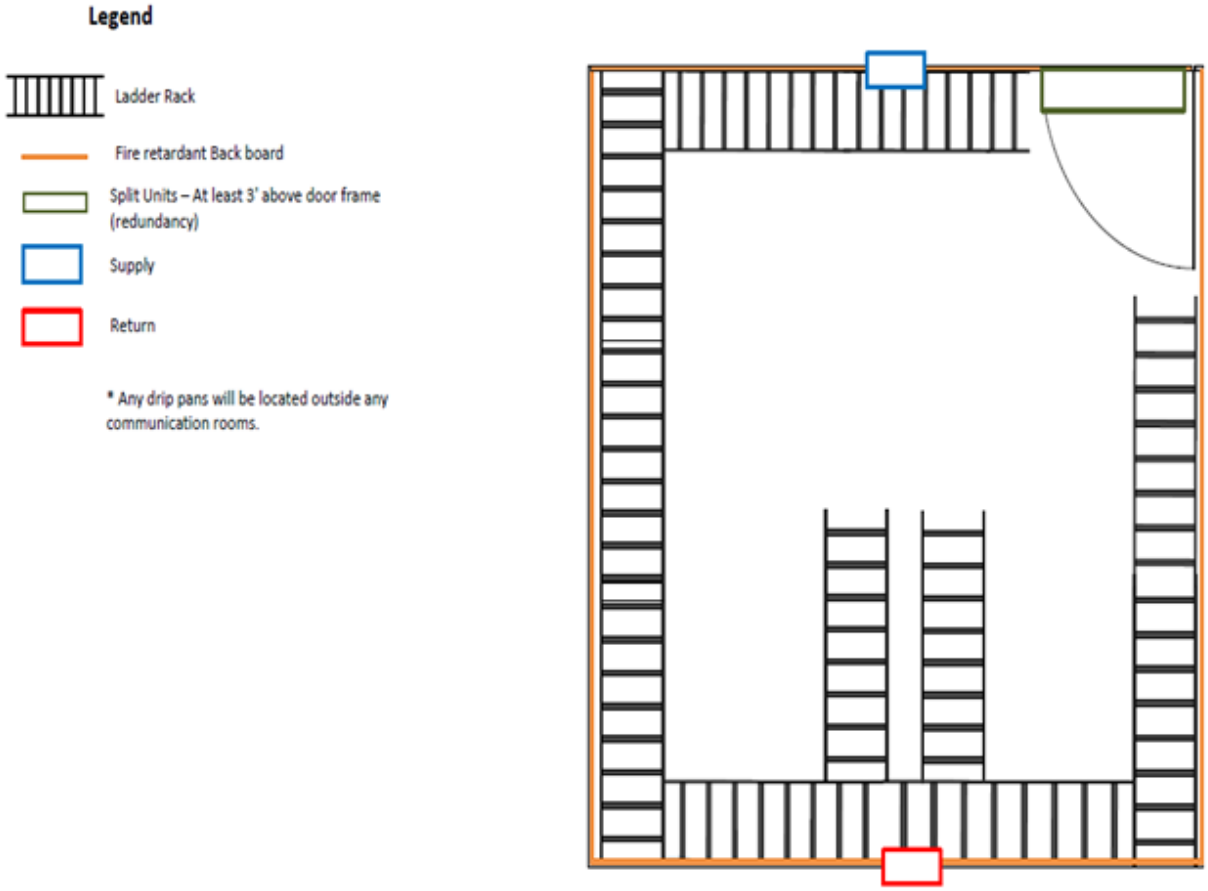

FIGURE 27-05 TYPICAL ENTRANCE ROOM LAYOUT HVAC

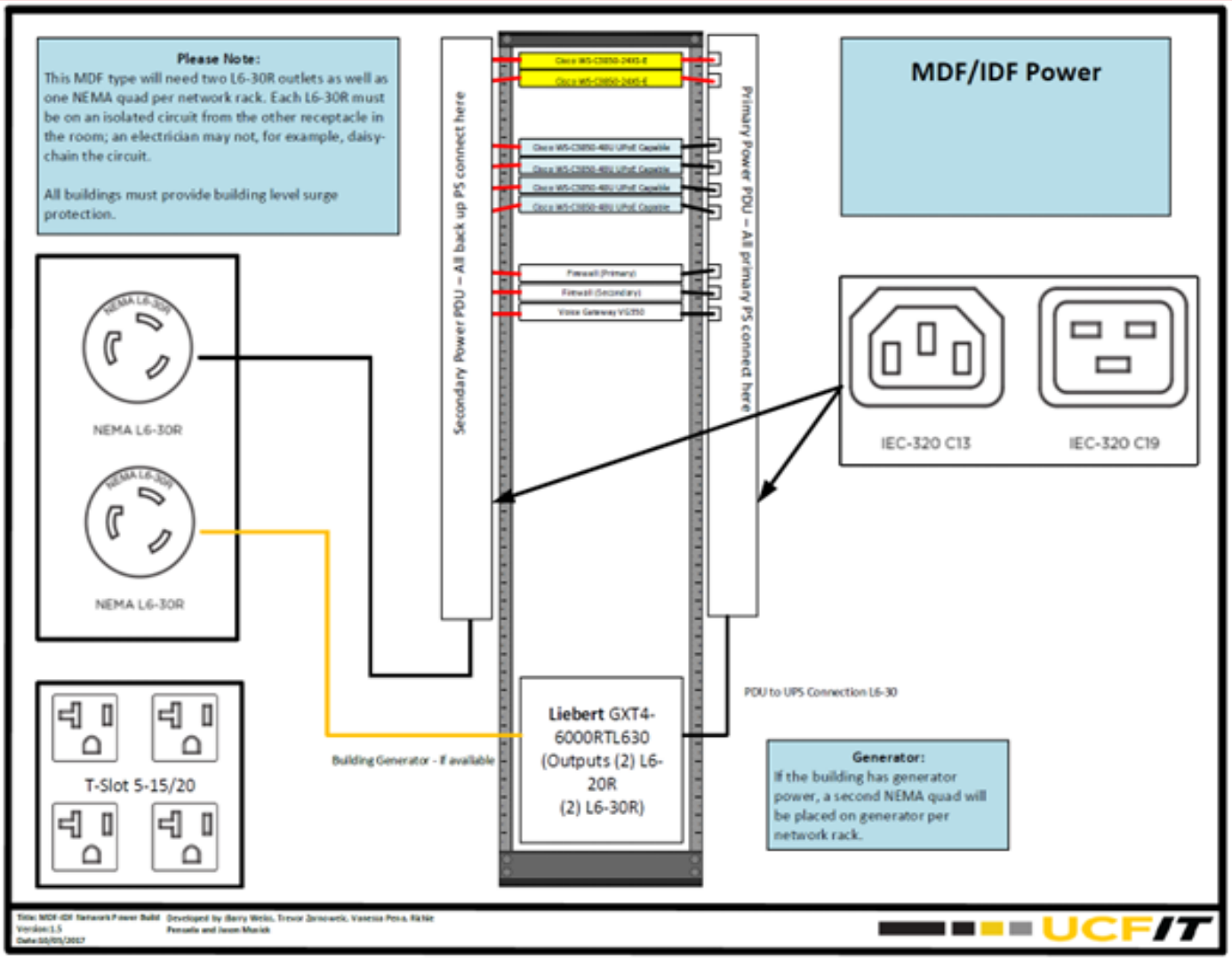

FIGURE 27-06 COMMUNICATIONS ROOM POWER REQUIREMENTS PER RACK

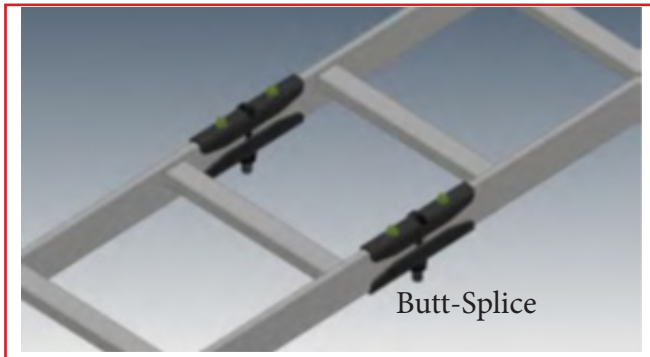

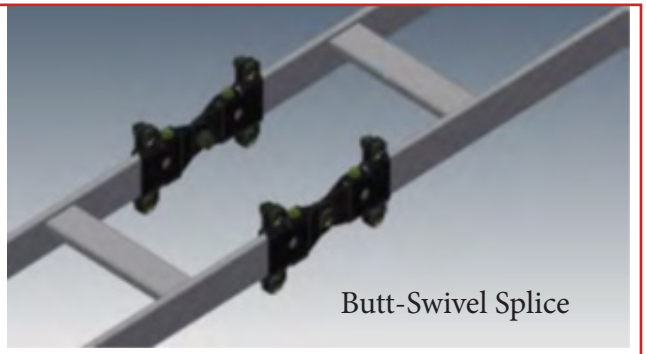

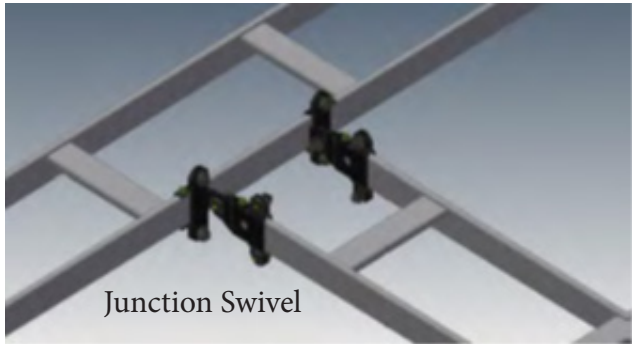

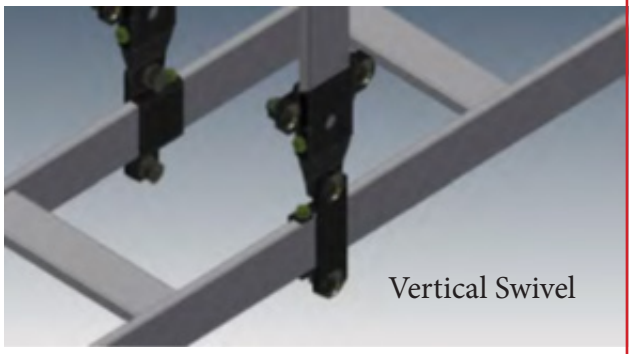

FIGURE 27-07 CABLE TRAY BONDING SPLICE KIT EXAMPLES

Drawing Item #	Description	Belden Part #
1	Rack, 19"W x 10"D	XDRAL8419101ZS1
2	Fiber Panel, 2RU, w LC Duplex	ECX-02U
3	Wire Mgr. 2RU	9511-1902-006
4	REVConnect Panel, 2RU 48-port	RV6PPF2U48BK

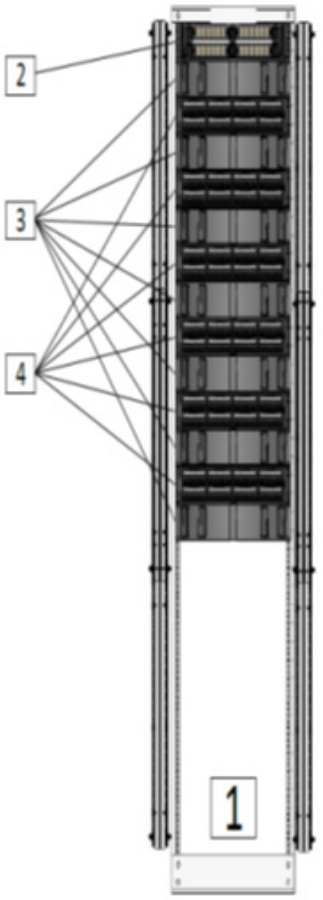

FIGURE 27-08 RELAY RACK ELEVATION

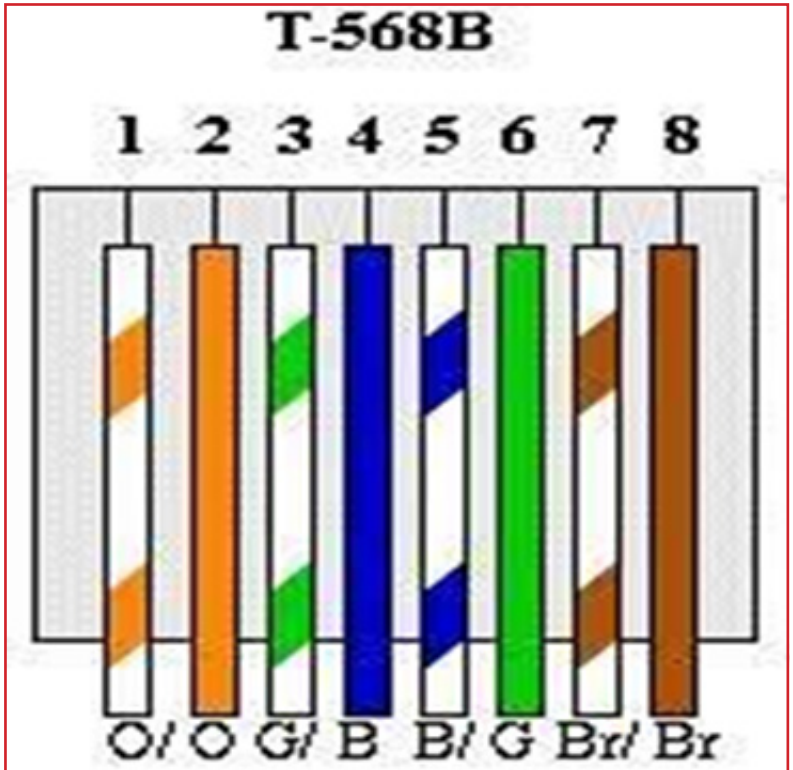

FIGURE 27-09 568B TERMINATIONS



FIGURE 27-10 CAT6A REVConnect TERMINATIONS

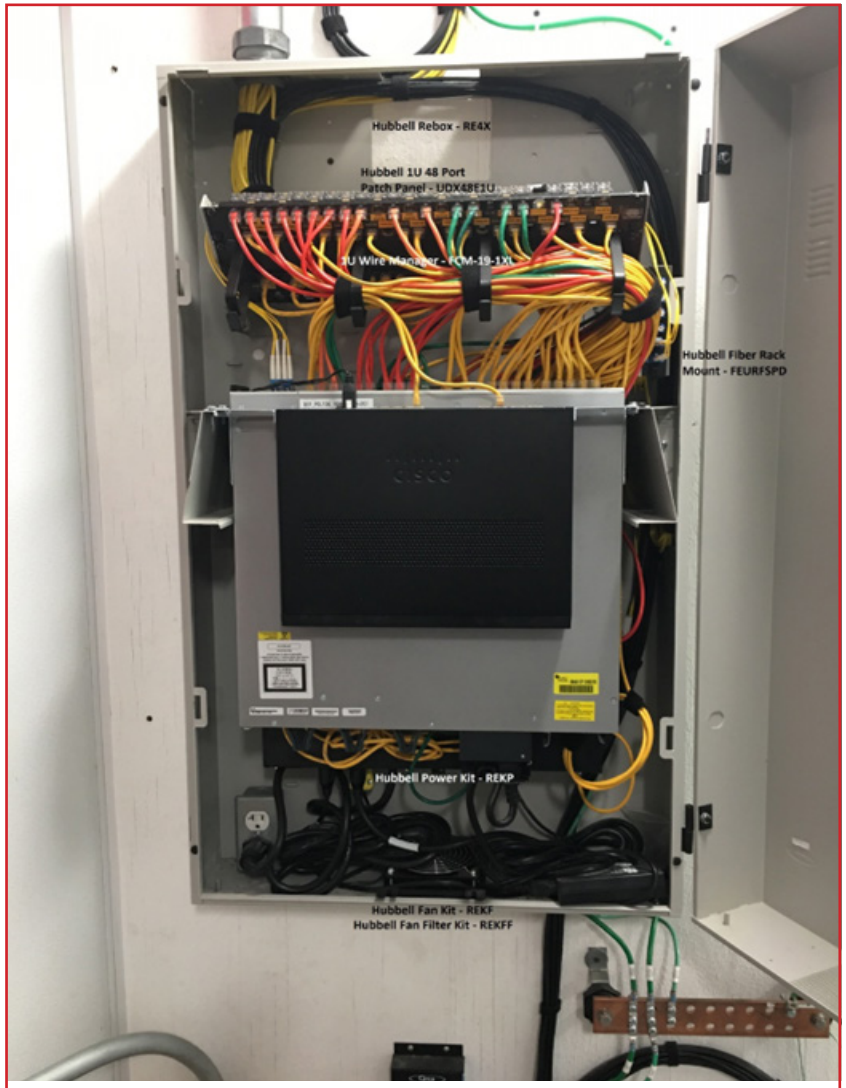

FIGURE 27-11 REBOX SOLUTION



FIGURE 27-12 EXTERIOR HOFFMAN BOX

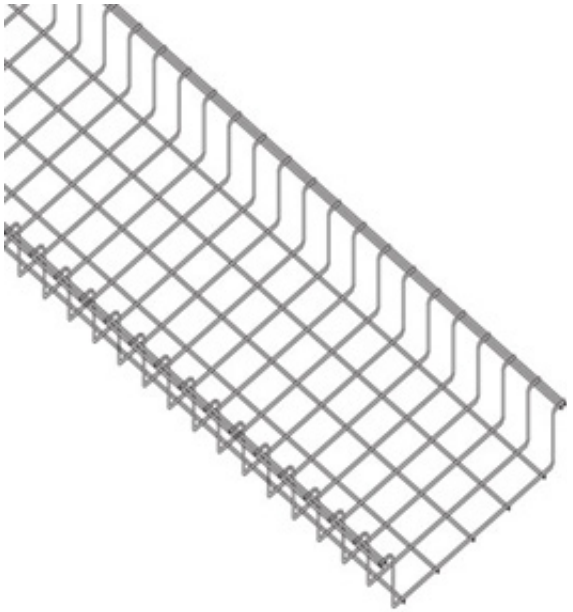

801 SERIES MEGA SNAKE TRAY



454 SEREIS UNIVERSAL SNAKE TRAY

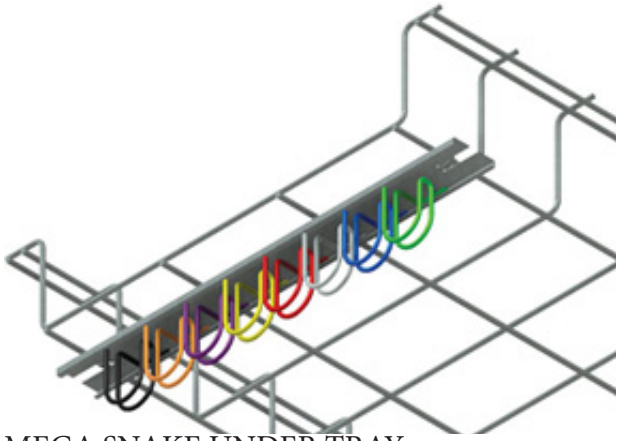

MEGA SNAKE UNDER TRAY

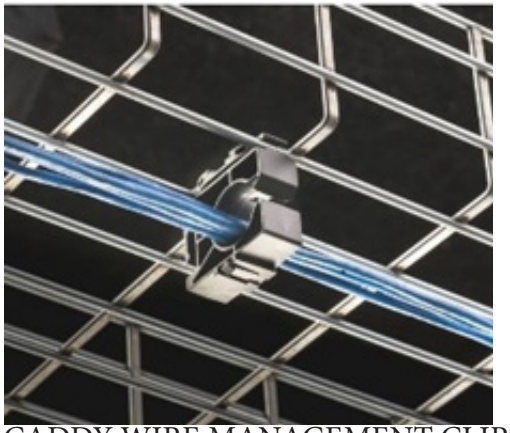

CADDY WIRE MANAGEMENT CLIPS

FIGURE 27-13 TYPICAL SNAKE TRAY OPTIONS





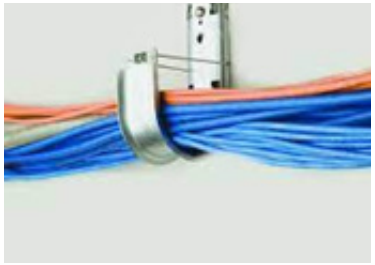



FIGURE 27-14 PREFERRED J HOOK OPTIONS

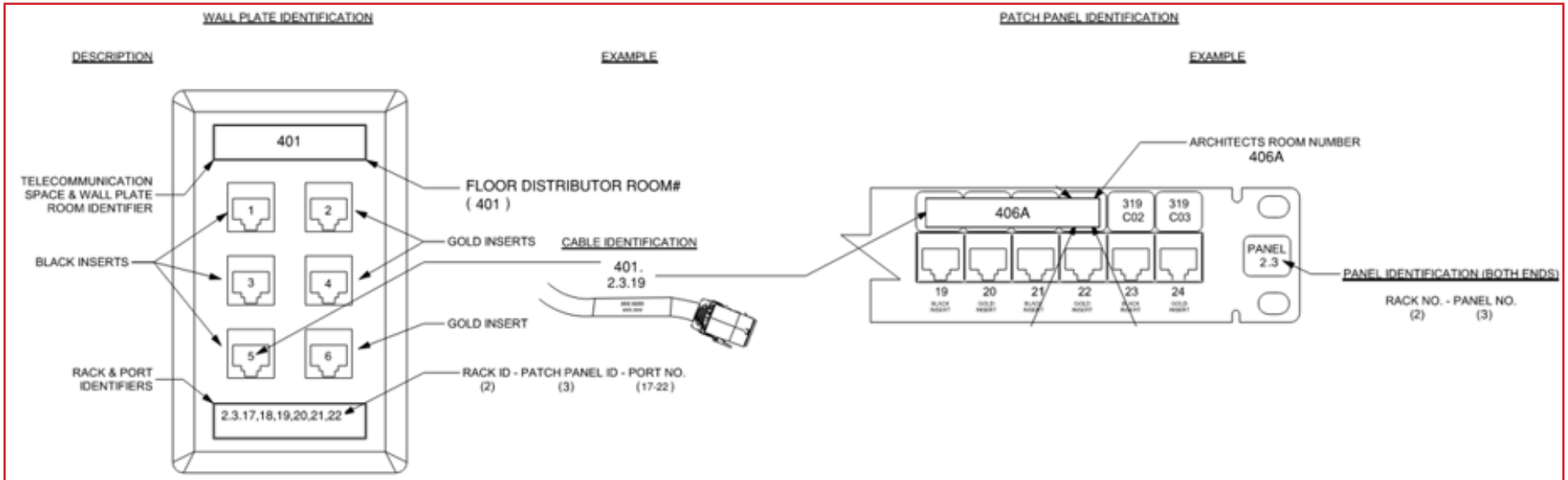

FIGURE 27-15 EXAMPLE IDENTIFICATION



FIGURE 27-16 PREFERRED SPEED SLEEVE

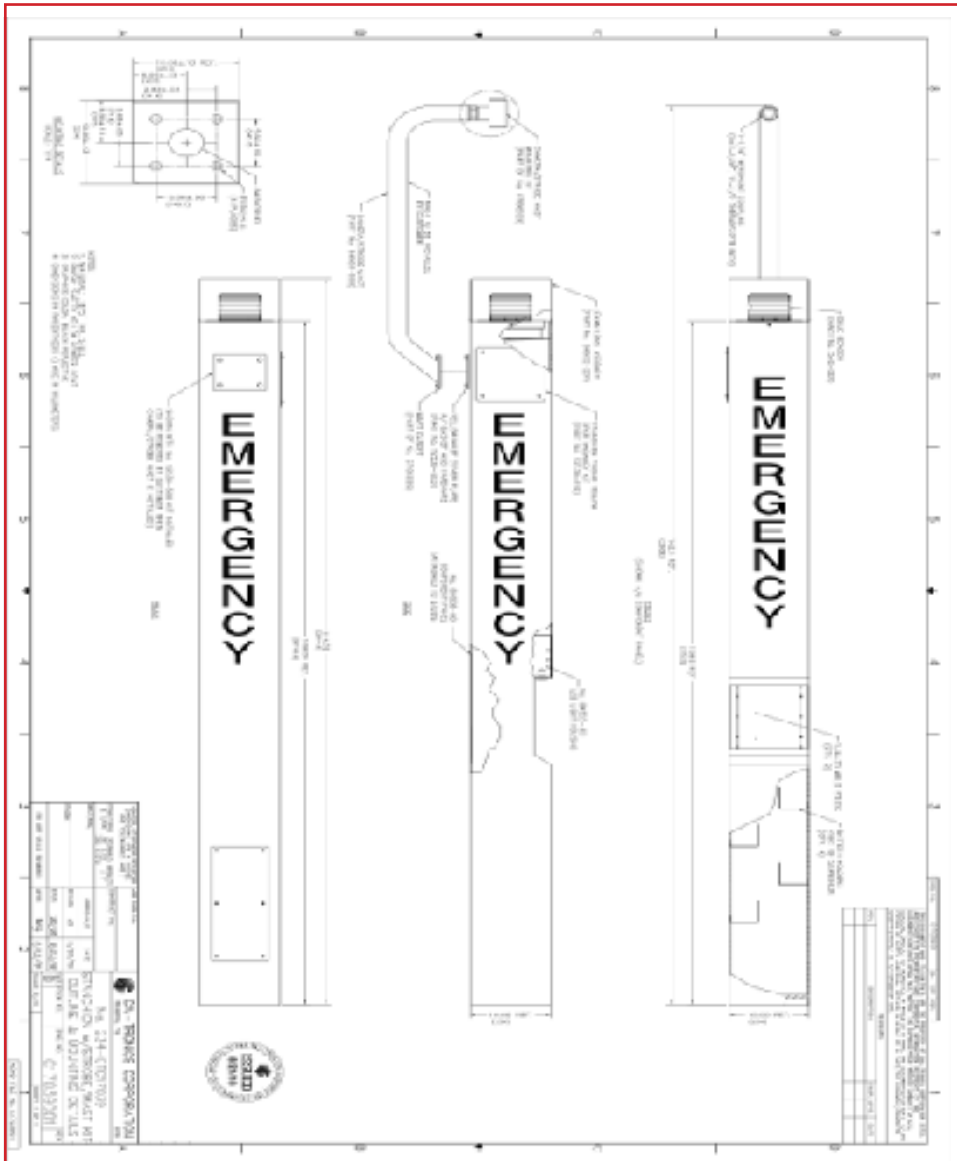





FIGURE 27-17 TYPICAL EBLP STYLES

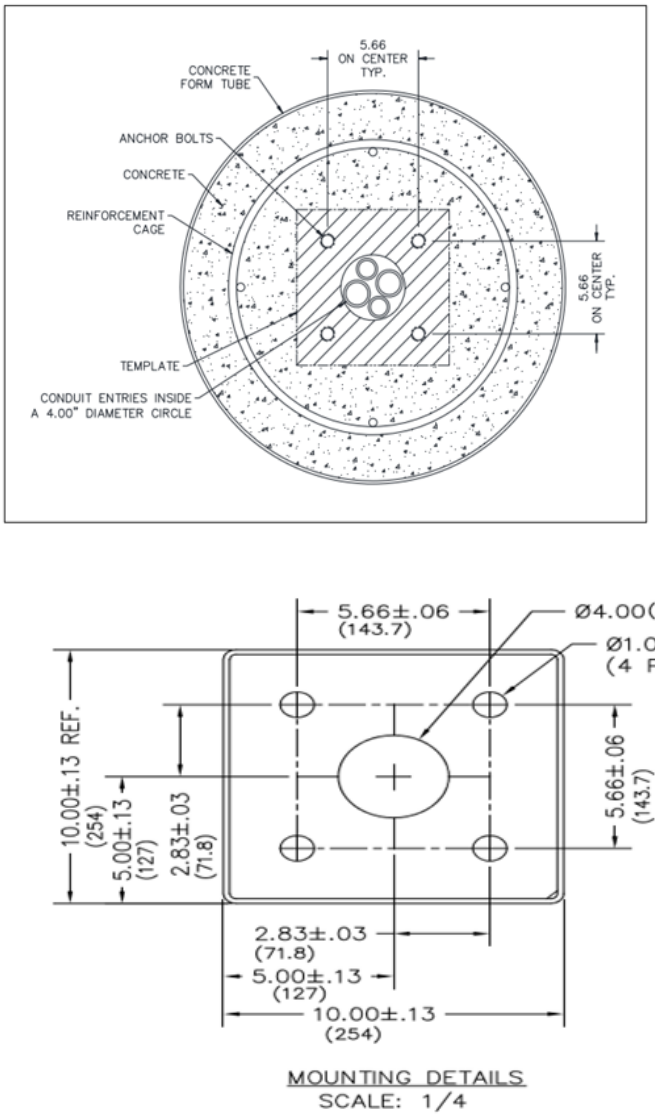

FIGURE 27-18 EBLP CONCRETE BASE AND TEMPLATE

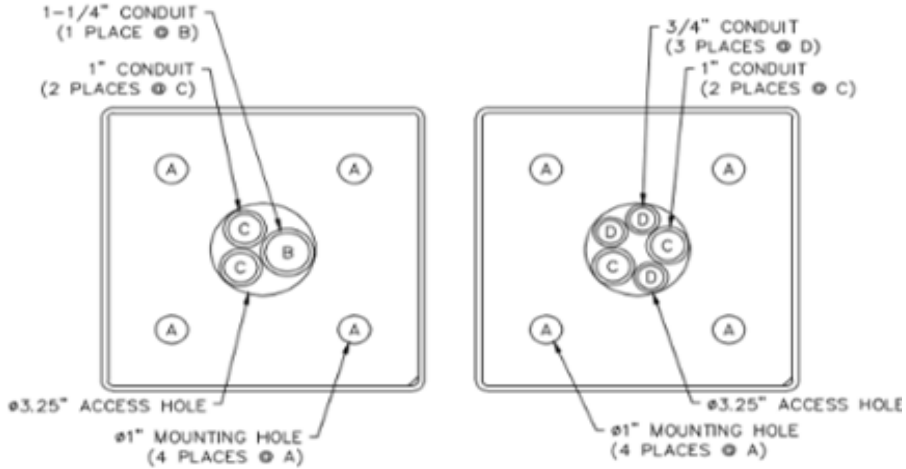

FIGURE 27-19 STANCHION BASE CONDUIT CENTERING

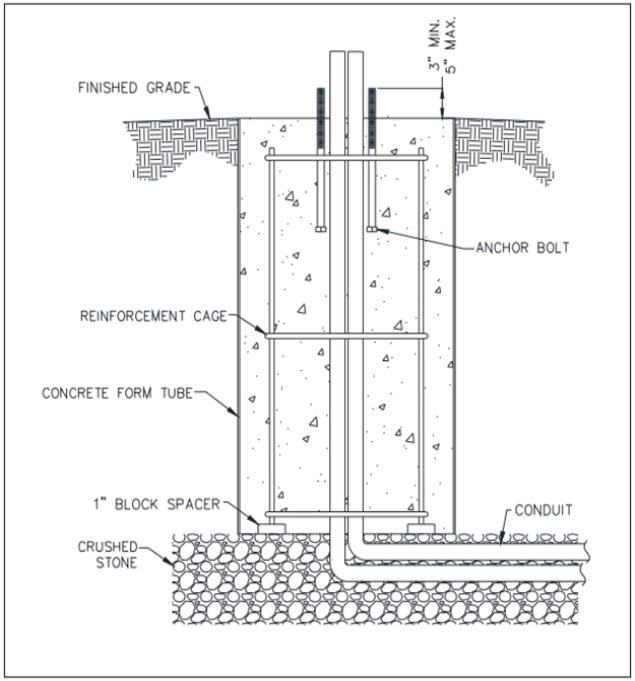

Tower Mounting

⚠ ATTENTION ⚠ —**The tower body should not be mounted until the concrete has been allowed to cure for a minimum of 24 hours.**

1. Thread the ¾-inch hex nuts onto the anchor bolts until the tops of the nuts are 1-1/8 to 1-3/8 inches above the top of the pier. Verify that they are level. Place one washer over each nut (see Figure 6).
2. Place the tower on top of the four level hex nuts with washers. **Verify that a ¼-inch minimum air gap exists between the base of the tower and the top of the concrete pier** (see Figure 7). This air gap must not be obstructed with soil, mulch, stone, etc. Failure to maintain this air gap will cause moisture entrapment that will result in corrosion.

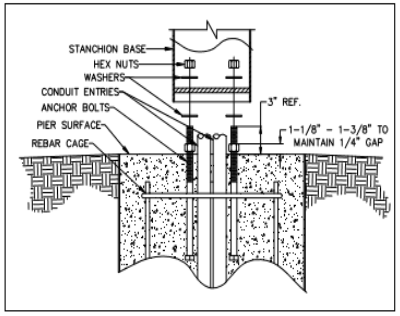

Figure 6. Exploded View

3. Entering through the rear access panel cutout, place the four remaining washers on the anchor bolts and secure with the ¾-inch hex nuts. Tighten the 3/4-inch hex nuts to a torque of 85 lb-ft.

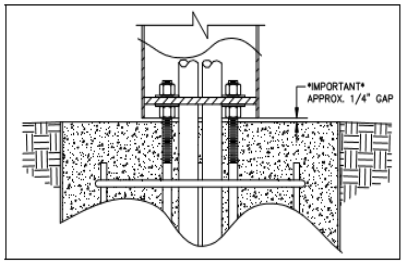

Figure 7. Assembled View

NOTE: The unit should be installed and grounded in accordance with national and local electrical codes.

FIGURE 27-20 TYPICAL STANCHION BASE AND MOUNTING DETAILS



CEILING GRID WIRELESS ACCESS POINT



CEILING TILE WIRELESS ACCESS POINT



EXTERIOR WIRELESS ACCESS POINT

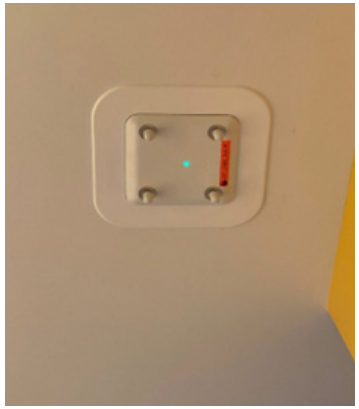

HARD CAP CEILING WIRELESS ACCESS POINT



FLOATING WIRELESS ACCESS POINT

FIGURE 27-21 TYPICAL WIRELESS ACCESS POINT STYLES

28

Division 28 - Electronic Safety & Security

This section includes:

Section I - General Standards

Electronic Safety and Security

- **Access Control**
- **Cameras**
- **Security and Panic Buttons**

Fire Detection and Alarm

- **Design**
- **Installer Qualifications**
- **Materials and Installation**

(cont'd on Page D.28-2)

Section I - General Standards

These standards apply to all projects. Additional Level Specific standards for individual project levels are indicated where applicable.

Electronic Safety and Security

Access control, camera, and associated cabling and conduit scope will be determined by the UCF Department of Security. Upon receipt of the Design Development drawings, the UCF Department of Security will review the drawings to locate and review the required card readers and cameras for each project. Device placement coordination shall be provided with University Operations for considerations including but not limited to aesthetics, landscape, and maintenance access.

ACCESS CONTROL

1. All access-controlled doors will be connected to the campus standard access control system.
2. At a minimum, the following spaces require electronic card access control on all access doors:
   - All exterior access doors
   - Mechanical rooms
   - Electrical rooms
   - Chemical storage rooms
   - Telecommunication equipment rooms
   - Office of Instructional Resources equipment rooms
   - Server rooms
   - Secure storage rooms
   - Classrooms
   - Research laboratories
   - Research spaces requiring access logging and reporting, and timely access changes
   - Conference rooms with multimedia equipment
   - Suite entrances
   - Residential building, laundry, pod, and suite entry doors
   - Other rooms as determined by the UCF Department Security
3. Doors designated by the Department of Security as time lock doors shall have the same components as a door designated for electronic card access, except a card reader is optional.
4. If one door to a space is provided electronic card access, all other doors entering the space must also be card access, time lock doors, or egress only doors without entry hardware. Coordinate required entry doors with accessible paths.
5. Egress only doors, including both leaves on double doors, shall have a door position switch (door contact installed at the top of each leaf between three (3") and six (6") inches from the edge with the latch, and request to exit (REX) device installed. Egress only doors shall have no exterior hardware. Double doors may share a REX. See **FIGURE 28-01 ACCESS CONTROL INSTALLATION DIAGRAM** at the end of this section.
6. Rough in for future access control shall be provided for all doors designated by the Department of Security during design.
7. Access control cabling shall be routed to the nearest available controller or sub-controller on the same floor.
8. Specific models for access control hardware (controllers, sub-controllers, card readers, door position switches, and request to exit (REX) devices) shall be determined by the UCF Department of Security.
9. Access control system cabling shall be in dedicated conduit systems or free wired as described herein.
   a. All conduit and cable shall be concealed to the furthest extent possible.
   b. For cabling required to be installed in conduit,

Approval, Documentation, Testing, and Warranty

Mass Notification Systems

wiring shall be permitted to be 3/4" metal conduit with compressions fittings where NEC fill limits are maintained, and 1/2" minimum is permitted on the short run between the door frame and the first junction box required directly above the door.

c. Protective raceways from a junction box above the secure side of the door shall be installed to the power transfer hinge, door position switch (door contact), single gang back box for the card reader, and request to exit (REX) device in all applications.

d. For cabling allowed to be free-wired, UCF IT Telecommunications shall provide and run access control cabling in accordance with all UCF IT Telecommunications standards.

10. All control boxes shall be installed in the closest available telecommunications room. UCF IT shall approve the room and wall placement within.
11. See Division 8 for additional access control hardware coordination requirements.

CAMERAS

1. All cameras will be connected to the campus standard video management system. No standalone systems will be permitted, unless specifically approved in writing by the Director, Security Management or Chief of Police.
2. At a minimum, buildings shall contain full camera coverage of the following areas:
   - Building exterior, including all exterior doors
   - Parking garages shall have minimum camera coverage of all parking and storage areas, vehicle and pedestrian entrances and exits, stairwells, elevators, and the building perimeter.
   - Surrounding roadways and buildings
   - Lobbies, floor entry points from stairs and elevators, and common corridors
   - Telecommunication equipment rooms
   - Server rooms
   - Retail spaces and other areas where financial transactions occur
   - Other areas as determined by the UCF Department of Security
3. UCF IT Telecommunications shall provide and install all camera (network) cabling in accordance with current UCF IT Telecommunications standards.
4. Specific camera locations, models, and necessary views will be determined by the UCF Department of Security in coordination with University Operations.

SECURITY ALARM / PANIC BUTTON SYSTEMS

1. Departments requesting security alarm and or panic button systems shall be advised that all costs associated with these systems such as, but not limited to, installation, routine maintenance, testing, upgrading, monitoring, etc., are the responsibility of the department. The department shall establish local departmental personnel and procedure for routine testing of security alarm and panic button systems.
2. All panic buttons shall be wired from the install location back to the security alarm panel. Wireless panic buttons are not permitted.
3. All security / panic button wiring shall be run in dedicated concealed conduit and raceways in accordance with other sections of this standard.
4. Security alarm panels shall be power by dedicated hard wired circuits and include minimum 24-hour battery back-up. Plugged connections to receptacles are not permitted. Circuits shall be selected with preference to emergency standby power sources where available.
5. Security alarm panels shall be installed in the nearest UCF IT equipment room in a location authorized by UCF IT.

Fire Detection and Alarm

1. All work, bypassing, signaling, receiver programming, and

fire watch services associated with a renovation on an active system shall be the responsibility of and managed through the respective facilities project contractors. Panels in occupied buildings shall be attended during all test/bypass activities. The UCF FO Fire Alarm Shop shall be notified in advance of all work. All work shall be recorded by daily summary line item entered in the system log (replacement sheets at the panel are available from the alarm shop upon request). The system shall be maintained generally in a trouble free status to avoid disruption to the monitoring dispatch. Additional contractor staffing is required at the monitoring receiver for signal acceptance testing activities as determined by UCF Police Dispatch.

2. **CN28-1: Installation of any system in no way implies continued maintenance service contracts with the installing Contractor. The installed system shall have replacement parts that are readily obtainable and can be serviced by a third-party, licensed vendor who is Owner-selected by a separate bid process. Such service shall not have an effect on warranties.**

3. Any materials not specifically mentioned, but required for proper performance and operation, must be furnished and installed. Coordination with infrastructure items such as telecommunications shall be planned for and itemized as needed.

DESIGN

1. The comprehensive system shall be all new from a single manufacturer with a current Nationally Recognized Testing Laboratory Listing (NRTL), to include all components for fire protective signaling. Alarm panels shall be listed at a minimum to the most recent UL 864 edition standards.

2. **CN28-2: The system shall be a recent model for which replacement parts and local service are guaranteed to be readily available for a minimum of ten (10) years from the date of installation. Panel shall be manufactured by FCI, Simplex, or Notifier and matching similar models and styles already installed. Basis of model shall be indicated in the proposal. Alternatives shall be approved by deviation prior to proposal acceptance.**

3. Systems shall be designed and installed as one unified system per building. Each building shall operate independently. Where part of an existing building is being renovated or expanded, the existing fire alarm system shall be upgraded to accommodate the new addition, in a unified, single system method with full annunciation (including microphone speaker) and controls throughout. If the old panel is expanded beyond its capability or listed connecting parts are no longer available, the entire system shall be replaced by one of the approved manufacturers listed above. **CN28-3: If more than 50% of an existing fire alarm system is affected or it is more than ten years old, it shall be upgraded to the current standard.**

4. **CN28-4: Each fire alarm system on the main campus shall be connected to the UCF Campus Receiving Station for fire alarm monitoring at the Police Building.** Building monitoring methods for sites not on the main campus will be determined by the Owner on an individual basis. Main campus monitoring methods shall be NRTLlisted for NFPA 72 Proprietar Supervising Service to the existing UCF Police Receiver via radio network on the FCC allocated UCF frequency for this application (452.1875 MHz). The fire alarm control unit and transmitter shall be able to reflect the full device address (point ID) for the initiating alarm, trouble or supervisory signal at the main panel display and remote monitoring receiving station. The monitoring and transmitting equipment shall be as stated here or be a manufacturer newer direct replacement of the following: AES 7788F-ULP 8 ZN Fire Subscriber with 7770 Fire Tap Module with serial connection or 7794 data module for built in phone line simulator, 7211 Stealth Antenna (450-470Mhz Range only), and compatible support equipment. All service and installation of the monitoring system shall be provided by an AES authorized

dealer with a minimum of 5 years of experience with hardware installation, service and programming. Alternative methods shall be Owner and AHJ approved in advance of service and bidding. A backup method of communications, where mandated by code or the Owner, may be required.

5. Fire alarm system signal transmission devices shall be located with similar fire alarm equipment in an area with smoke detection.
6. The fire alarm control panel shall be located in a main lobby or common corridor near a Fire Departmentaccessible exit. Additional remote annunciators may be required by the Owner. All buildings where hazardous materials are handled shall have an external annunciator in a weatherproof box secured by thumb latch or similar non-keyed device.
7. All system components requiring access for testing, maintenance, and inspection shall not be located in office, storage, or instructional spaces used by building occupants. Maintenance-intensive items such as batteries and sprinkler testing controls, shall be located at finished floor level for easy access.
8. Gas utility service shall have an automatic closing low voltage solenoid controlled shutoff valve programmed to close on general fire alarm and where required by code for spot detection at fuel fired source hazards. Solenoid shall have a testing bypass button programmed at the main panel. Valve shall trip closed on solenoid deenergization, and require manual reset. Non-latching supervisory monitoring shall be provided on the solenoid power status, and for the valve closed position where available. Where local power circuit is needed for the solenoid it shall be dedicated and labeled in red and provided with breaker lock. A placard shall be provided at the main FACP providing notice of manual reset of the gas valve needed after panel reset. **See example placard FIGURE 28-02 GAS SOLENOID PLACARD.**

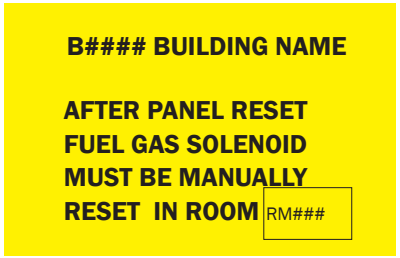

FIGURE 28-02 GAS SOLENOID PLACARD

9. Building sound systems shall be coordinated with fire alarm audibility levels as approved by the AHJ. Small class and conference rooms may be permitted to have the audio system programmed for maximum 75dB with proximate fire alarm audio visual device coverage. Assembly spaces with occupancy > 49 and all other sound systems shall be provided with a relay for automatic shut off upon activation of the fire alarm.
10. **CN28-5: In addition to where required by code, all buildings meeting the following criteria shall be designed with a fire alarm including voice evacuation throughout (EVAC), Main campus systems shall be connected to the campus Mass Notification System (MNS) where determined required by the Department of Emergency Management:**
    - **Any facility with 300 or more occupants or capable of being expanded to 300 or more;**
    - **Any facility with 50 or more occupants above or below the level of exit discharge;**
    - **Any facility with hazardous processes, materials, or laboratories;**
    - **Any facility deemed so in need by the UCF Emergency Manager, due to special circumstances.**
    - **Where a fire alarm system is not required but a Mass Notification System is deemed essential, a separate voice notification system is required. See the Mass Notification System section for further details.**

11. CN28-6: Atriums and similar spaces are to be avoided when possible due to the necessity for these complicated smoke evacuation and control systems as provided by code. Where such systems are installed, the engineer of record shall provide a comprehensive system Operations and Maintenance manual for approval prior to permitting.

Such manual shall:

a. Identify all sequences of operations and all associated equipment and systems (HVAC, fire alarm, sprinkler, doors, dampers, fans, etc.) with drawings, cut sheets, and identification labels that will also be installed on each applicable component.

b. Include a walk-through and balance protocol, indicating the initial acceptance testing sequence for all components on all power sources, with a comprehensive report matrix. The matrix will be executed and filled out by the installer and approved by the engineer of record prior to Certificate of Occupancy.

c. Include a reoccurring service test and balance and maintenance protocol matrix to be used by the Owner for semiannual and annual services and comparison to the original acceptance testing.

INSTALLER QUALIFICATIONS

The installing Contractor for the fire alarm system shall, at a minimum, be a certified alarm system Contractor I and a direct sales division of, or the authorized and designated distributor for the fire alarm system manufacturer in the greater Orlando area, with at least ten years of manufacturer-certified work experience. Device installation, connection, terminations, final programming, testing, and certification shall be managed by a NICET Level IV and performed by a NICET Level III or higher manufacturer-certified trained, technician. Proof of qualifications shall be provided with all proposals.

MATERIALS AND INSTALLATION

1. The Fire Alarm Control Panel (FACP) shall be in a unified enclosure, microprocessor-based, intelligentloopinterfaced, modular in construction, and in a complete new cabinet. Each system shall be capable of being expanded at any time, for up to the predetermined capacity for known building additions, or for a minimum of two additional modules.
2. The FACP shall, at a minimum, include: Walk Test, Positive Alarm Sequence (PAS), Alarm Verification, Voice EVAC where required, multi-level alarm processing, trouble reminder, dry contacts (zone, trouble, alarm, & supervisory), and smoke detector sensitivity testing. It shall be 24 VDC non-coded, power-limited.
3. The FACP shall have a minimum eighty character alphanumeric LCD display with user-defined character capacity. The display must indicate all system conditions and device locations with description, room number, and relative compass location within the building. The panel shall have a steady “Power On” light and separate “Alarm” (red color) and “Trouble” (amber color) LED indicators.
4. The fire alarm control panel shall contain a history buffer capable of storing up to 1000 system events. Each of these events shall be stored with time and date stamp. The history buffer shall use non-volatile, programmable memory and shall not be lost in the event of system primary or secondary power failure.
5. The CPU shall be capable of being programmed on-site without the use of any external programming equipment, and shall accept firmware upgrades via connection with laptop computer, without requirement of replacing microchips, EPROMS, or similar.
6. The system shall have the capability of networking with

other control panels via a single pair of copper wires, Ethernet, or fiber optic cables. The EVAC functions shall include a microphone, control switches, and zoning as determined by the Owner (typically zoned at a minimum by floor).

7. Additional microphone and control modules shall be placed at remote annunciators as determined by the Owner. Local microphone shall take priority over all messaging systems. EVAC messaging must be appropriate for the facility served, and a sample of the factory-recorded message shall be sent to the Owner for review and approval.
8. **CN28-7: All initiation device (IDC), notification appliance (NAC), and signaling line (SLC) circuits must be Class A (NFPA Style Z), with no T-Tapping or spiderwebbed type circuitry.** A single ground fault or open circuit on the SLC shall not cause system malfunction, loss of operating power, or loss of ability to report an alarm. Loss of any one (1) NAC circuit shall not cause loss of any other NAC circuit in the system.
9. Each SLC and NAC shall be limited to only seventyfive (75) percent of its total capacity during initial installation.
10. Dedicated HVAC control detectors shall not sound the general alarm unless required by code. Deviations for special circumstances shall be discussed during design and outlined in the sequence of operations.
11. HVAC systems shall shut down on a general alarm and by duct detector controls in office- and classroom-type buildings in addition to duct detector controls.
12. HVAC in buildings with hazardous materials and associated exhaust shall only shut down on duct detector control or as required for emergency exhaust operations to prevent areas from becoming excessively negative. For buildings with hazardous materials, separate control buttons for remote individual area HVAC shutdown shall be provided at the panel as one of the pre-programmed buttons outlined below.
13. To maintain continuity of operations dedicated CRAC type units in IT equipment areas are preferred to not shut down upon general building FA. CRAC detection shall be low voltage FA system devices, and connected to local computer room suppression alarm panels where possible. Device connectivity and CRAC shut down sequence shall be reviewed and coordinated with UCF FO and IT.
14. Where a Smoke Evacuation system is provided, the FACP shall have means for manual operation. Separate control panels are not preferred when the main panel is capable of listed controls. A “Manual Off” and “Manual On” switch or button position for the Smoke Evacuation system shall be monitored as a supervisory indication. Activation of the switch shall include, by program, all associated functions required for proper operation, such as damper closure, door opening, etc. Additional buttons must be provided for individual related functions as needed to facilitate routine testing.
15. Hold-open devices for fire doors shall be a sturdy, fixed magnet-type mount.
16. The FACP shall have the capability to be field-programmed for selective operations customary to the system, as required by unique job conditions, must be capable of being programmed by keypad access by the Owner and be secured via standard key and code, without external computer interface.
17. Programmable function keys shall be provided for each of the following actions:
    - Alarm signals bypass
    - HVAC shutdown bypass
    - Door hold-open device bypass
    - Elevator recall bypass
    - Any others actions determined by the Owner
18. Codes and addresses shall be supplied to the Owner. The

Owner shall have programming capability for individual points and manual control. An "Alarm Silence" switch shall be included. Each system shall be capable of at least four levels of password protection. The Contractor shall provide the Owner with all passwords associated with the system, including any programming passwords.

19. The FACP shall perform continuous testing of analog sensors, including sensitivity tests with compensation for age and environmental conditions. Problems shall be indicated for each device with, "Failed Test, Self-Test Abnormal, Dirty, or Very Dirty," or similar, and shall be recorded in the event log. Additionally, the LED on the sensor base shall glow steadily, giving a visible indication of the sensor location.
20. Initiating control modules shall be dedicated to the type of component served for individual programming control. HVAC shutdown and other control functions shall be accomplished from the FACP rather than by individual smoke detector relays.
21. The system shall have a primary (main) power supply connected to dedicated branch circuit(s) and shall also be connected to the building's generator emergency system. The circuit(s) disconnecting means shall be provided with a breaker lock clearly marked, "FIRE ALARM," and labeled in red on both the legend and circuit breaker. Circuits serving individual panels shall be clearly indicated with indelible inside the panel access cover.
22. There shall be a secondary (standby battery) 24VDC battery power supply to the complete system. Batteries shall be placed at finished floor level working height.
23. A complete surge suppression system for the protection of the building fire alarm system from the effects of induced transient voltage surge and lightniing discharge shall be provided for all new and or modified components that are not adequately protected. Provide dedicated surge suppression equipment at the following minimum locations:
    - On each conductor pair and cable sheath entering or leaving a building.
    - On each conductor associated with fire protection(sprinkler) system fire alarm connections located adjacent to exterior building envelope penetrations.
    - On any and all telephone, data, or antenna lines.
    - In other locations where equipment sensitivity to surges and transients requires additional protection beyond that inherent to the design of the equipment, such as locations prone to lightning strikes. Where equipment being protected has internal surge suppression equipment, the surge protection equipment herein specified is required to be installed in addition to internal equipment protection unless prohibited by code or listing.
    - Where request by the owner during design. The device shall be labeled and mounted at the main FACP, at the electrical panel with the FAS circuit breaker(s), and at the protected component. The device shall incorporate a replaceable fuse design and failure indicator. Acceptable devices include EDCO model number HSP121BT-1RU, DITEK DTK-120X12, or Facilities Operations-approved equivalents.
24. All system panels, controls, pull stations, and cabinets shall be made tamper-resistant using a lock keyed-alike to a standard key typical of the chosen manufacturer.
25. The annunciator panel shall be modular in design, reflecting all status audible and visual indicators the same as the main FACP, with a minimum eightycharacter alpha-numeric LCD display. It shall have review function capability and alarm reset/silence secured by key switch. The annunciator shall be housed within a NEMA-rated enclosure, where appropriate.
26. Manual stations shall be non-coded, double-action,

flush-mounted, and on the manufacturer's specified box. Break-rods are prohibited. The system standard key is required for reset. Acceptable devices include Safety Technology International (STI), model number STI-1100, or equivalent.

27. Detectors and sensors shall use point addressable bases, allowing detectors to be interchangeable via twist-lock mounting. Each detector/detector base must incorporate a steady-state light to indicate if it is in alarm. The unplugged detector shall be capable of normal handling without damage.
28. Smoke detectors shall be primarily plug-in photoelectric. Ionization smoke detectors shall be used as specified in special applications such as computer rooms or electrical rooms. Ionization smoke detectors shall have two levels of sensitivity, which can be easily set.
29. Thermal detectors shall be a bimetallic, restorable-type device.
30. Air duct, plenum, and under-floor detectors shall be installed in a manner that provide the easy access for periodic cleaning and calibration. Remote alarm indicator light and test switch shall be located in the nearest corridor or a public area and be adequately labeled with the location and type of device monitored. The Contractor shall measure air velocity (CFM) across each duct to verify design and indicate CFM readings on the duct detector housing. All duct penetrations shall be properly sealed.
31. Beam smoke detectors shall be single-ended, with a reflective beam smoke detector. The detector(s) shall consist of a transmitter/receiver both within the detector unit. The detector shall have an integral sensitivity test filter attached to a servo motor inside the detector optics, or other acceptable integral test method. The detector shall include a reflector. The detector shall allow for beam alignment between the detector and the reflector, to be performed at the detector. Any remote alarm indicator light and test switch shall be located in the nearest corridor or a public area and be adequately labeled with the location and type of device monitored.
32. Notification appliances shall have both audible (A) and visible (V) alarm signals. Visible signals shall be the white strobe (flash discharge)-type, with a minimum intensity of seventy-five (75) candela. When installed in corridors, the visible signal shall be equipped with a side viewing lens. Devices shall be combined AV where possible, to reduce fixture counts.
33. Fire alarm devices shall be consistent in type and color throughout the building.

LEVEL C RENOVATIONS

Where fire alarm AV devices are not available to match existing. the entire floor shall be upgraded.

34. Audible indicating devices shall produce area sound level signals 15dB above ambient noise, but not more than 100dB where ambient conditions do not require it. The tone shall be distinctive, but moderate in nature; "shrill"-sounding horn-type appliances are prohibited.
35. All ~~indoor~~ sprinkler, standpipe, and similar fire suppression control valves shall be provided with monitored tamper switches (including ~~indoor~~ pumps, PIV and BFP). Water flow switch-monitoring shall be provided at a minimum to identify flow by floor or specialized area as determined by the owner, with an integral fifteensecond time-delay device to prevent nuisance alarms.
36. All life safety detection or alarm devices in the facility will be system devices where a system is available. 120V devices are prohibited unless there is no other code compliant alternative.
37. Residential suite smoke alarms shall be programmed as

follows: First device activation within any suite shall only sound within the suite of origin and initiate a supervisory signal on the main panel. Second device activation within the same suite will initiate building wide alarm.

38. All system shall include tamper-minitored Fire Department access boxes, with locations determined by the Owner.
39. Fire pumps shall be monitored by the FACP at a minimum for general trouble and "Fire Pump Running", in addition to local fire pump annunciation.
40. A firefighter's two-way telephone service communications, as required by code or to match existing, shall be provided.
41. All panels shall be mounted with sufficient clearance for observation and testing. Conduit (joints, through penetrations, and minimum 10' interval) and junction boxes shall be identified as, "Fire Alarm," using red conduit.All raceways, mounting boxes, junction boxes, and panels shall be securely hung and fastened with appropriate fittings, to ensure positive grounding throughout the entire system. Conduit model shall be Allied "True Color" Red or equivalent. All raceways in finished areas shall be concealed, except for open ceiling and similar areas which may be color matched and intermittently labeled for aesthetics and shall be approved by Facilities Operations during design.
42. **CN28-8: System wiring shall be in red raceways (Allied "True Color" or equivalent), minimum ¾" EMT.** All conduit fittings shall be steel compression-type (die cast type prohibited), marked for fire alarm use only. Flexible connectors (minimum ½") only are permitted for end sections less than six (6) feet in length between a box and a suspended or moveable device. No wiring other than directly associated fire alarm detection, alarm, or auxiliary f ire protection functions shall be permitted in fire alarm raceways. Wiring splices shall be avoided other than in alarm devices and terminal strip junction boxes, and will use crimp connection or other approved method. Powerlimited, non-power-limited, and AC power conductors shall be run in separate conduit paths.
43. In new construction, all raceways serving the fire alarm system shall be run above slab, and enclosed within building construction in all finished areas. In renovations and remodeling, raceways shall be enclosed where possible. Any exposed raceways in finished areas shall be approved by the Owner prior to installation.
44. All new or replaced systems, and renovations with ten (10) or more new devices shall include the attic stock listed below at turnover.
    a. Attic stock shall be in original or similar protected packaging, labeled, and inventoried by transmittal delivered to and signed for by the FO Fire Alarm Shop
    b. Requests to reduce these turnovers must be approved by the Director of FO during design.
    c. Minimum attic stock provided per new item type below shall be ten (10) % of number installed or no fewer than one (1) each matching installed, or as indicated for the following:
        - Detector heads and bases each: smoke, heat, beam (sending and receiving), etc.
        - Notification devices each as applicable: speaker only, strobe only, and combination audible visual devices (both wall and ceiling where installed).
        - Pull Stations.
        - Fuses: two (2) spare of each type.
        - Keys per new system: ten (10) plus one (1) for the fire department access box. Renovations shall match existing system keyway.
        - Relay control module: one (1) spare of each type.
        - Monitor control modules: one (1) spare of each type.
        - Power supply: one(1) spare.
        - Additional items identified during design.

45. Transposing or changing color-coding of wires is prohibited. Color codes and types of wires shall follow the schedule in **FIGURE 28-03 WIRING SCHEDULE**, be consistent throughout the system, and depicted in a legend on the inside of control panel or terminal cabinet, as well as on the system as-built drawings. All wiring shall be American manufactured. All individual separate circuits shall be additionally field identified with wire marker tags. Each panel shall also reflect the area of circuit coverage (whole building, partial wing, floor(s), etc.). **CN28-9: All conductors in cabinets shall be carefully formed and harnessed so that each conductor drops off directly opposite to its terminal.**Cabinet terminals shall be numbered and coded. All controls, function switches, etc., shall be clearly labeled on all equipment panels. All wiring shall be checked and tested to insure that there are no grounds, opens, or shorts.

Circuit Type	Color	Type
Horn/Strobe	Orange or Black jacket 2 conductor	solid FPLR
24v DC device power	Blue jacket 2 conductor	solid FPLR
Door Holder	White jacket 2 conductor	solid FPLR
Initiating/SLC	Red Jacket 2 conductor red/black	solid FPLR
Speaker	Yellow or Green jacketed 2 conductor twisted shielded pair	solid FPLR
Strobe	Black jacket 2 conductor	solid FPLR
Control points (HVAC shutdown, elevator recall, etc.)	Red/Blue	stranded THHN 14 AWG
PIV/BFP	Yellow/Blue	stranded THHN 14 AWG Listed for Wet Locations

FIGURE 28-03 WIRING SCHEDULE

46. A unique identification number, as reflected on the shop drawings, shall be assigned to each initiating device, professionally marked on the unit base, and readily visible from grade.
47. All controls and specific sequences of operations required achieving reset, fan control, etc., shall be permanently labeled in a professional manner.
48. A fully qualified and trained representative of the equipment manufacturer who is thoroughly knowledgeable of the specific installation will provide a training session to personnel selected by the Owner. Training, consisting of a minimum of two sessions at three hours each, shall be scheduled with the Owner to accommodate a day and evening shift attendance and must be video-recorded by the Contractor. Training shall cover, at a minimum, basic operator duties, such as resetting, activating, troubleshooting, bypassing, and testing. The presentation shall include instructional handouts as needed and viewer participation and demonstration. The training shall utilize the Ownerprovided UCF Minor Fire Alarm Service Personnel Training Overview Form and shall cover all items outlined therein, as well as others deemed necessary for the specific installation.
49. Every new fire alarm system, and renovations including added NAC's or replaced main panel boards shall be provided with a Listed document box at the main FACP where one is not existing. Such box shall be nominal 12"x12"x3", secured with barrel lock keyed alike to the system, red, labeled "Fire Alarm Documents" , and contain integral minimum 8 gig digital flash storage. BOD is ACE-11 FAD.

APPROVAL, TESTING, DOCUMENTATION, AND WARRANTY

50. Shop drawings, battery calculations, voltage drop calculations, wiring diagrams, sequence of operations for all programmed conditions, listings, complete cut sheets-and installation- program manuals shall be provided for permit and Owner approval prior to installation.

CN28-10: The fire alarm system shall be successfully

inspected, demonstrated, and approved by the Engineer of Record prior to requesting inspection by the State Fire Marshal.

51. In addition to standard test papers, local sensitivity test readings of the installed devices shall be provided for all smoke sensing devices. Certification papers shall be prepared in advance and provided to the inspector for approval at the final test. Final tests shall include full performance of smoke evacuation, pre-action, and similar systems. All components, door operation, air flow, shut down, etc. shall be verified on normal and standby power conditions. The design shall include a UPS power backup system for proper operation of required equipment under emergency power transfer conditions.
52. For all projects including alteration of a fire alarm system with MNS connectivity (existing or new) and where the fire alarm system software program is modified, re-uploaded, or otherwise altered in any way, the contractor shall perform a functional test of the MNS system and provide a completed "Fire Alarm Upgrades for Mass Notification Connection" test record form, available from the UCF Department of Emergency Management.
53. Initial and reacceptance testing of newly installed or relocated notification appliances shall include sound pressure levels measured as specified in NFPA 72. "Throughout," as noted by the code, shall be defined a readings taken separately from within each new or newly divided, occupied space. System pretesting and all record readings shall be completed, and a hard copy and PDF will be provided to the Owner for review prior to final acceptance testing. Additional copies will be included in turnover documents, as required by other sections of this Standard.
54. Prior to final acceptance, Contractor or Owner will provide a hardback system log book with a copy of the final State Fire Marshal-approved test papers, sensitivity reports, and two (2) copies of a simplified map of the building, showing device locations and the numeric address of each device. Additional framed copies of the system device map shall be mounted professionally beside each FACP and annunciator An electronic PDF version of all locator maps and a copy of the system software is required for CO.
55. Provide the "as-built" package as defined in Division 1.
56. Prior to final acceptance, the Owner shall be provided with a reproducible, accurate, system "as-built" package in electronic and hard copy form. Drawings shall be compatible with AutoCAD and contain conduit layout and wiring diagrams, including wire color code and tag number. The "as-built" package shall include a minimum of two hard copies, and two digital copies of the comprehensive "Operation and Shop Maintenance Manual" and a digital (USB drive) copy of the site-specific software for each system and facility, including all passwords.
57. The Contractor shall provide the means for the Owner to make simple program changes, such as label changes. This shall include any programming software, security devices to access the software, and training to accomplish the task.
58. The Contractor shall warranty all equipment and systems for a minimum period of two (2) years following the date of final acceptance or the manufacturer's warranty period, whichever is greater. The warranty shall include repair parts, labor, and prompt field service, pick-up, and delivery, as coordinated with the Owner. The Contractor shall provide the first year of testing outlined by NFPA, including a sensitivity test within one year of installation. Such tests shall be documented by the Contractor and included in the owner system log.

Mass Notification Systems

1. **CN28-11: All new main campus facilities must be provided with a means of Emergency Mass Notification.** Such Mass Notification System (MNS) must be fully compatible and completely integrated with the existing campus wide Cooper Notification System and must include all building based equipment, wiring, audio visual devices (AV), transmitters, receivers, visual display screens, network connections, conduit, power supplies, etc. When a new building is located adjacent to an outdoor area subject to frequent assembly, additional devices must be installed to transmit messages to the outdoor vicinity. When a building fire alarm system is used in conjunction with the messaging system, the fire alarm system must be installed with all necessary listed components for proper annunciation of the externally transmitted MNS signals. To ensure compatibility, all components, modules, interfaces, digital message repeaters, and amplifiers used in the MNS must be manufactured and supported by HQE SiRcom or otherwise compatible with Cooper Notification or an approved equal. Substitutions are not permitted. The UCF Department of Emergency Management shall review and approve all equipment prior to installation.
2. The MNS must be compliant with UFC 4-021-01, OSHA 1910.165, the current Florida Fire Prevention Code, the current Florida Building Code, the National Fire Protection Association NFPA 72, the American's with Disabilities Act (ADA), the Common Alerting Protocol (CAP), and the Safety Act Certification from DHS.
3. The installation is subject to review by the UCF Building Department, the Florida State Fire Marshal (SFM), UCF Emergency Manager, and designated representatives of the UCF Offices of University Operations. Installations must meet all University Standards as outlined in other divisions of this document including aesthetic considerations reviewed by facilities managers and representatives of University Operations.
4. Qualified installers must be a direct sales division, or a trained and authorized vendor of HQE SiRcom MNS System that has demonstrated design, installation, sales, and service maintenance of the system with a minimum of five (5) years' work experience on projects of similar size and scope. Installer must have a Fire Alarm Systems NICET Level IV qualified individual for project management, oversight, and final fire alarm connection. All installation personnel must have been trained and approved by the equipment manufacturer with proof of certificated manufacturer training provided upon request. Equipment must substantially come from one manufacturer of established reputation and experience. They must show proof of availability to provide replacement parts for key components within a 24 hour express order timeframe.
5. It is the general intent that the MNS must operate in conjunction with the separate building fire alarm voice EVAC system and must include all components necessary for that interconnection. MNS systems shall be installed to provide for individual building activation for message annunciation. At a minimum, the MNS system must be capable of capturing and making voice announcements with the fire alarm appliances (where provided) or with a dedicated speaker system throughout the facility at sufficient levels of intelligibility but at no less than the higher of 15 db above ambient noise or 50 dB in normally occupied areas. AV devices that are separate from building fire alarm systems must be installed in a like manner as outlined by the latest adopted edition of NFPA 72.
6. The design must include a clear description of the capturing sequence and priority for fire alarm activation. The joint fire alarm and MNS must be verified by the engineer of record for compliance with the applicable codes with details stated on the design documents. Local fire alarm microphone must take precedence over all remote messaging systems.
7. Each system must be provided with dedicated power and attached to the backup emergency generator, where provided. All system components for AV messaging and the common area type displays must be provided with an emergency power source. Such source must supply power in quiescent mode for not less than 24 hours and then must be capable of operating the system in active and emergency

mode for not less than 15 minutes at a maximum connected load. Each system must be provided with surge suppression devices to the fire alarm, on all power supplies, and connections that extend beyond the building envelope (like antennae). Acceptable devices are manufactured by EDCO or DITEK with indicator light or approved equivalent. Power supplies must be dedicated and provided with breaker clips. Backup power supplies must be as outlined for NFPA 72 fire alarm systems.

8. Prior to installation, each system must be submitted for plans review with description of function, complete shop drawings, wiring diagrams, parts list, and component specifications. The drawings must indicate the exact location of all installed components and wiring paths. Where the fire alarm system is employed in whole or part, this Standard's Fire Alarm Section will apply. Where visible components will have potentially undesirable effects in finished areas, it is the responsibility of the installer to ensure an aesthetically pleasing installation. Exposed conduit in finished areas is not acceptable. Equipment must be located in common corridors, facilities mechanical & electrical type spaces, or similar type common spaces. Departmental server rooms, private offices, and other similar user secured spaces must not be used. Stairwells must not be penetrated or used as chase-ways. All MNS wiring must be run in minimum conduit size of 3/4 inch EMT. All conduit fittings must be steel, compression type. Die cast type is not permitted. Wire pathways must be concealed in all finished areas where at all possible. Exposed items and the manner of finish it must be approved by the Owner prior to installation. "MNS" label must be applied intermittently along conduit in unfinished areas and inside box covers.
9. Upon completion of the installation, the Contractor must complete performance testing (pre-testing) of the MNS for compliance with the manufacturers' guidelines and codes above. Performance results, including the required sound pressure levels and intelligibility values, must be documented with notation of any deficiencies and corrective actions submitted to the Owner. Upon successful completion of performance testing, the Contractor must complete a witnessed acceptance test with the AHJ to include the SFM, Building Official, and or designated University Representatives. The contractor shall perform a functional test of the MNS system and provide a completed "Fire Alarm Upgrades for Mass Notification Connection" test record form, available from the UCF Department of Emergency Management.
10. A training session must be presented by a fully qualified and trained representative of the equipment manufacturer who is thoroughly knowledgeable of the specific installation. Training, consisting of a minimum of 2 sessions at 3 hours each, must be scheduled with the Owner to accommodate a day and evening shift attendance and must be video recorded by the Contractor.
11. The Contractor must warranty all equipment and systems for a period of not less than two (2) years following the date of final acceptance. The warranty must include parts, labor, and prompt field service, pick-up, and delivery.
12. The Contractor must provide a complete set of record as-built drawings and operations and maintenance manuals for the MNS. Record drawings and operations and maintenance manuals must provide information for troubleshooting, preventive maintenance, corrective maintenance, and schedule of frequently required replacement parts. A procedure and checklist for no less than an annual re-certification of the system must be provided.
13. When installed MNS component cabinets are equipped with locks, the Contractor must provide the Owner with four (4) keys.When possible, the Contractor will install MNS component cabinets keyed the same as existing MNS component cabinets on campus.

14. Prior to final acceptance, the Owner must be provided a reproducible accurate system "As-Built" package in electronic and hardcopy form. Drawings must be compatible with AutoCAD and contain conduit layout and wiring diagrams, including wire color code and tag number. Submittals must include a minimum of two (2) hard copies of composite "Operation and Shop Maintenance Manual," including a digital media (USB drive) copy of the program for each system and facility.

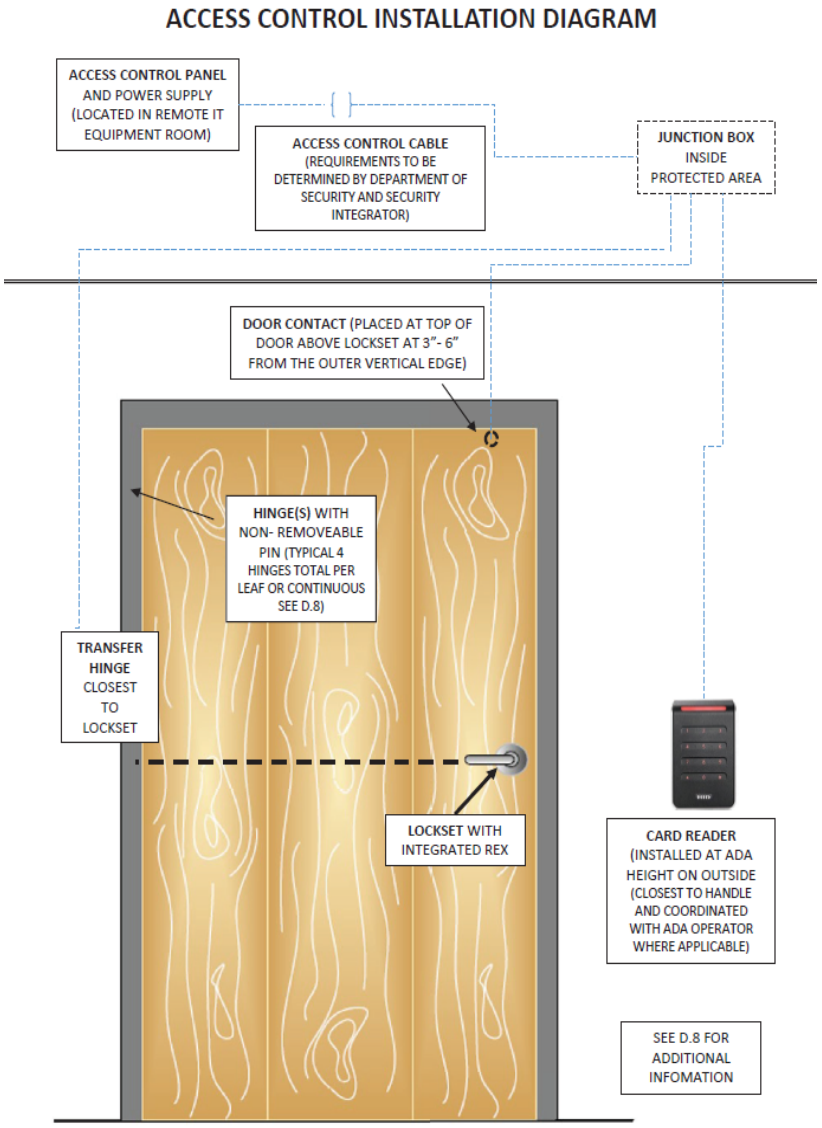

FIGURE 28-01 ACCESS CONTROL INSTALLATION DIAGRAM

31

Division 31 - Earthwork

This section includes:

Site Clearing

Rough Grading

Excavation and Fill

Termite Control

Site Clearing

1. Trees or shrubs shall not be removed without the approval of Landscape and Natural Resources. Removal of trees and shrubs shall include the removal of stumps and roots to the extent that no root greater than one inch in diameter remains within five feet of an underground structure, utility line, under footings, or paved areas. Grubbing in open areas shall include the removal of stumps and one inch roots to two feet below finish grade elevations.
2. Where new structures replace existing structures, the extent of foundation removal will be indicated on the drawings. Foundations of structures, conduits, etc., shall be removed in their entirety. Hazardous material removal shall be conducted prior to structural removal, as spelled out in federal, state, and local requirements. All abandoned utilities within the construction boundary shall be removed from the site.
3. Disposal of existing buildings and structures, trees, dismantled equipment, etc., is the responsibility of the Contractor, with approval by the UCF Project Manager.
4. **CN31-1: Any existing tree(s) indicated to remain (per approved construction plans) that are damaged or removed during construction must be replaced with new tree(s) of similar size.**

Rough Grading

Site grading of landscaped areas must be consistent with natural contours wherever practical. Grading of all open space areas near buildings must occur so as to channel storm water flows away from the structure gradually. Grading must be minimized in areas where indigenous or otherwise established vegetation is to be maintained. Berming for screening or open space definition is encouraged, consistent with the berming guidelines of this section. The standard berm slopemust be 6:1. Berms must not exceed 3:1 slope under any circumstances. Berms sloped between 3:1 and 4:1 must be planted with groundcover. Berms sloped between 4:1 and 6:1 may be planted with lawn or groundcover.

Excavation and Fill

1. **CN31-2: Clean topsoil and other clean excavated soils shall not be removed from the campus and shall be stored at a site designated by the UCF Project Manager. All testing and transportation of excavated material is the responsibility of the Contractor. All soil and appropriate testing shall be approved by Landscape and Natural Resources prior to transportation.**
2. **CN31-3: Soil that is compromised with debris, organic and inorganic, as determined by testing, shall be removed from the campus.**
3. Care shall be taken to prevent soil erosion, in accordance with DEP and any required LEED certification.
4. If soil is needed on a project, the Contractor shall first request the use of UCF stockpile soil through the UCF Project Manager. If soil is unavailable from UCF, the Contractor shall be responsible for obtaining soil from other sources.
5. The Contractor is responsible for ensuring the suitability of any soil used on the project. All soils will be tested to determine the suitability of the existing soils for the proposed planting. The result of the soil test must be provided to the UCF Project Manager.
6. When necessary to hold large piles of excavated earth on the job site, the Contractor shall be required to provide cover or adequate means of watering the soil to prevent wind erosion.
7. Fill under interior and exterior slabs-on-grade or pavement and placed under landscaped areas shall meet current ANSI/ASTM standards.
8. Backfilling required at the building perimeter and at site structures up to subgrade elevation shall meet current ANSI/ASTM standards.

Termite Control

1. Termite treatment is required for every building. Termite treatment shall be required under all footings, slabs-on-grade, and sidewalks adjoining the building (up to 5' from building). Termite treatment shall not be applied until excavating, filling, compacting, and grading operations are complete. The Contractor shall use caution to prevent disturbance of the treated area. If any area is required to be re-treated through no fault of the Owner, it shall be done at the Contractor's expense.
2. A perimeter bait system is required.
3. Chemicals and application shall conform to the EPA Federal Insecticide, Fungicide, and Rodenticide Act.
4. The Subcontractor for soil treatment shall furnish a service agreement stating the work performed will be guaranteed for a period of five (5) years from the date of Substantial Completion and that the structure will be inspected yearly for infestation, and treatment provided as necessary. The Subcontractor shall offer an optional renewal of the service on the same terms. The type of chemical treatment shall be specified, including the amount of application per unit area. The service agreement shall state that, in the event of damage during the guarantee period, the Contractor shall make repairs to structurally damaged surfaces to a dollar value based on the size of the building. An independent testing laboratory shall certify that the treatment meets the requirements of the Owner.

References:

U.S. Environmental Protection Agency Federal Insecticide, Fungicide, and Rodenticide Act (FIFRA) http://www.epa.gov/oecaagct/lfra.html

32

Division 32 - Exterior Improvements

This section includes:

Introduction

Bases, Ballasts, and Paving

Curbs, Gutters, Sidewalks, and Driveways

- **Driveways and Parking Areas**
- **Sidewalks and Ramps**

Site Furnishings

Irrigation

Planting

Planting Preparation

Turf and Grasses

Tree Grates

Introduction

This section contains the requirements for tree planting, fencing and screening, curbs, sidewalks and paving.

Bases, Ballasts, and Paving

1. All asphaltic concrete paving materials and installation shall comply with requirements of the Florida Department of Transportation.
2. Concrete paving shall be installed in accordance with current ANSI and ASTM Standards.
3. Expansion joints shall be shown on the drawings, in accordance with the current ANSI and ASTM standards.
4. Control joints shall be saw-cut to squared relief, e.g., six foot wide sidewalk, with a saw cut every six feet.
5. Finishes shall be floated and troweled, with a medium broom finish.
6. Directional boring shall be used when crossing streets and roads.
7. Concrete walks shall be cut and replaced from joint to joint and doweled to the remaining slab.
8. All concrete sidewalks under ten feet in width shall be a minimum of six inches thick, reinforced with fiber mesh conforming with the current American Concrete Institute (ACI) standards. Total edge thickness shall be increased to a minimum of fourteen inches. Walks ten feet and greater in width shall use fiber mesh concrete and be a minimum of eight inches thick, with edge thickness increased to a minimum of sixteen inches total, and shall contain two #5 rebar. See “Concrete Walk Edge” detail on page D.32-4.
9. All paved pedestrian gathering areas shall use clayfired pavers. Sub-bases for pavers shall be a minimum of six (6)-inches thick concrete, with 6 x 6 #10 wire mesh re-inforcement, and edge thickness increased to a minimum of eight (8) inches thick.

Curbs, Gutters, Sidewalks, and Driveways

Detectable warning pavers (truncated domes) shall be placed where pedestrian walks meet roadways in accordance with Americans with Disabilities Act (ADA) Guidelines.

DRIVEWAYS AND PARKING AREAS

1. All driveways and parking surfaces shall be paved with asphalt or concrete to a depth determined by the Engineer of Record (EOR), with Owner approval.
2. All parking lots shall be arranged to maximize the number of parking spaces and shall incorporate islands with green space. [KN] Islands shall include irrigation, ground cover and larger planting species coordinated with LNR standards, bare mulch is prohibited. Turf grass and sod type products shall not be provided. Loose gravel/stone shall not be used besides pedestrian ways.
3. Parking spaces shall be identified with four inch (4”) wide single striping. The minimum width of each parking space shall be nine feet (9’-0”) clear by nominal 18’-0” deep, or greater width as required for ADA, measured to the center of the bordering stripe on each side of the space or aisle.
4. Roadway and parking striping, stop bars, and arrows (or similar) shall be provided with a thermo-plastic traffic marking material incorporating reflectorizing glass bead. Application shall achieve minimum 90 to maximum 120 mils coating thickness. Colors shall match similar shades already applied on campus and be reviewed with UCF Parking and Transportation prior to application. Product shall not be thinned down without owner’s prior approval. Paint and workmanship shall provide for minumum 1 year warrenty to not fade, peel, chip, or otherwise show substansial wear lessening the visibility of the markings.
5. All Paved vehicular use areas shall be curbed with appropriate concrete curbing.

SIDEWALKS AND RAMPS

Knight Notes

32-1: The design of surface lots shall coordinate with Parking and Transportation and the University Architect early in the project to establish the aesthetic goals for the project area. The placement and selection of native plant species in coordination with LNR is crucial in ensuring visibility and maintainability.

1. All sidewalks shall be a minimum of six inches thick and shall be reinforced with wire mesh. Walks ten feet and greater in width shall use fiber mesh concrete and be a minimum of eight inches thick, with thickened edges (minimum of sixteen inches total), and shall contain two #5 rebar.
2. Finishes shall be floated and troweled with a medium broom finish.
3. Fire lanes shall support a gross vehicle weight of thirty-two tons.
4. Civil or Architectural plans shall indicate control joint locations on sidewalk plans. Sidewalks shall be designed to avoid cracking from irregular shapes.
5. All sidewalk patches shall be done from joint-to-joint. Patches shall typically include an expansion joint on at least one side of the new sidewalk area.

Site Furnishings

1. All outdoor furnishings shall comply with the Campus Design Standards located in the Campus Landscape Master Plan and Design Standards provided by UCF University Operations. All selections must be approved by Landscape and Natural Resources.
2. For all new facilities, the location of bike racks shall be considered during the design of landscape and hardscape features. The number and location of racks shall be determined by the design committee. All bike racks shall be set in concrete, with adequate footings. Individual racks shall be spaced 30 degrees on center. The concrete pad shall extend 36 degrees past the last rack on the ends. The racks shall be centered on a 12-foot wide pad with the length determined by the number of racks to be installed.
3. **CN32-1: All exterior seating and retaining walls must be designed with integral anti-skateboarding devices.**

Irrigation

1. All landscaped and sodded areas shall be irrigated, and fed from the reclaimed water supply. The system shall be designed using Best Management Practices (BMPs), based on the following criteria:
   - An automatic sprinkler irrigation system is required for all landscaped areas.
   - The irrigation system will be designed and operated to prevent or minimize runoff of irrigation water onto roadways, driveways, walks, etc.
2. All irrigation shall meet the UCF Irrigation Specifications provided by Landscape and Natural Resources.

Planting

1. All site and landscape design shall comply with the Campus Landscape Master Plan and Design Standards provided by UCF University Operations. All plant selections must be approved by Landscape and Natural Resources.
2. **CN32-2: All plant species shall comply with Florida Friendly™ Standards. No shrubbery or trees shall be installed around or in front of light poles, transformers and switch gear, or fire service equipment. Future plant growth shall be considered relative to signage, lighting, and entryway features.**
3. Creeping vines on buildings are prohibited.
4. A landscape plan must be provided for all projects that have any impact outside of a building. The plan must include:
   a. Plant list showing botanical name, plant container size (or equal in the case of field grown material), and quantity of plant material to be installed.
   b. Caliper size for all trees shown in plant list.
   c. Limit of work line that matches demolition plan limit

of work line.

d. Required tree replacement points per Tree Replacement Requirement Table 2-1.

e. Proposed tree points per Tree Replacement Value Table 32-1.

5. All installed trees must be Florida number 1 or better per the most recent edition of Florida Grades and Standards for Nursery Plants. All trees will be graded at time of final inspection.
6. Tree and plant installation shall follow all UCF Standard Operating Procedures. These procedures can be found on the UCF Landscape and Natural Resources website.
7. All plant material including trees, palms, shrubs, groundcover, and sod shall be inspected upon arrival for proper transportation techniques, disease, and pests. Any material found with damage shall be rejected.
8. Monoculture of trees on a project is prohibited. No tree species may account for more than 50% of the trees proposed on a project.
9. All Palms must have a minimum of 10 feet of clear trunk.
10. One Large Canopy Tree, Type I, shall be planted for every 100 linear feet or fraction thereof of building facade on each side of any proposed building or building expansion.
11. Trees and palms shall be setback from buildings and walkways per the Minimum Tree Setbacks Table 32-2.Table 32-1Tree Replacement Value

Table 32-1

Tree Replacement Value

Tree Type	Size	Replacement Value
Tree Type I - Large Canopy (e.g. Oak, Maple, Magnolia)	1 inch	7 points
Tree Type II - Tall & Narrow (e.g. Cypress, Cedar, Elaeocarpus)	1 inch	4 points
Tree Type III - Understory (e.g. Crapemyrtle, Ligustrum, Tabebuia)	1 inch	2 points
Standard Pine Tree (e.g. Loblolly, Slash)	1 inch	1 point
Specialty Pine Tree (e.g. Longleaf)	1 inch	2 points
Standard Palm (e.g. Sabal Palm, Chinese Fan Palm)	1 palm	10 points
Specialty Palm (e.g. Sylvester, Medjool)	1 palm	40 points

Table 32-2

Minimum Tree Setbacks

Tree Type	Min. Distance from Building	Min. Distance from Walkway
Palm	8’	4’
Date Palm	15’	4’
Tree Type I (Large Canopy)	20’	10’
Tree Type II & III (Tall & Narrow or Understory)	15’	8’

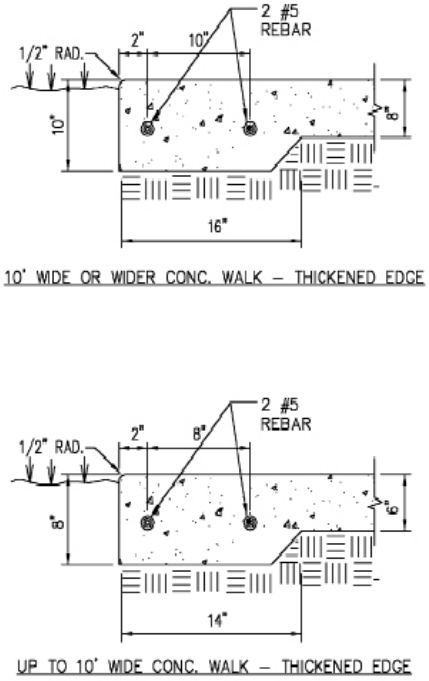

Concrete Walk Edge

Planting Preparation

1. Slopes shall not be greater than one (1) foot vertical to six (6) feet horizontal in grassed areas.
2. Existing stockpile topsoil shall be free from sticks, stones, roots, clods, and any other extraneous material. All rocks and debris greater than 1" in diameter shall be removed.
3. Imported topsoil shall be a fertile, friable, natural topsoil of loamy character obtained from a well-drained, arable site, free from sticks, stones, roots, clods, and extraneous matter. Topsoil shall be a clay loam, indigenous to the general area in which the project is located, and suitable for planting and seeding.
4. A six-inch depth of topsoil for seeded areas and twelveinch depth for planting areas is required. The pH for all topsoil shall be within the range of 6.5 to 7.5. If the soil tests outside that range, the Contractor is responsible for supplementing the soil to achieve the appropriate pH.

Turf and Grasses

All areas not otherwise landscaped shall be sodded with solid sod, as approved by LNR. All sod shall be rolled immediately after installation, according to industry standards. Subsoil shall be scraped to a depth of six inches where topsoil is to be placed. Cultivation shall be repeated in areas where the subsoil has been compacted by equipment.

Tree Grates

Tree grates shall be dimensioned as required, with concentric patterns having iron frame sections and iron grates, bolted to the frame. Grates shall be sized or adjustable for twenty (20) years of growth for specific species. Tree grates shall be capable of handling pedestrian and vehicular traffic.

References:

U.S. Department of Justice Americans with Disabilities (ADA) Guidelines http://www.ada.gov

33

Division 33 - Utilities

This section includes:

Introduction

Mission Statement

General Comments

Wastewater Service and Installation Requirements

- **General Information**
- **Typical Requirements**
- **Pump Stations**
- **Metering**
- **Plan Review and Coordination with UCF UES**
- **Field Inspections with UCF UES**

(cont'd on Page D.33-2)

Introduction

The UCF's Department of Utilities and Engineering Services (UES) has developed these requirements. UES is responsible for building, maintaining, and operating all distribution-owned infrastructure, metering, and energy monitoring, both University and utility-owned, -operated, or -leased.

The purpose of this document is to set forth the policies, reference standards, and procedures that UES has put in place to manage building interconnection and provide access to these utilities.

UES provides a basic level of utility service to users. Special measures shall be taken on by the user to account for electrical power momentary outages and protection of surge equipment, or to account for reliability in the event of power loss.

Mission Statement

The mission of UES is to ensure and provide distribution utility reliability, safety, compatibility, and compliance with all applicable governing regulations and agreements in place, while providing the University with accurate energy reporting and measurement of consumption.

General Comments

1. All excavation activity on UCF property requires utility locates to be completed prior to excavation, as per UCF Procedure FS 2016 FS0022 and Chapter 556, Florida Statutes. UES oversees utility locate services on the main campus. Utility locates must be requested by calling 811 or submitting online via www.Sunshine811.com.
2. For utility locate markings in areas with hardscape to remain, the contractor shall specify "minimal marks" (dots) in the locate request to avoid excessive markings. Prior to project completion, the contractor shall remove all utility locate markings and restore affected surfaces to a clean, mark-free condition.
3. UES is responsible for oversight and field inspections of all new and reconstructed utility infrastructure. All field interconnection requirements (installations, inspections, testing, etc.) must be scheduled and coordinated through UES.
4. Landscaping:
   a. Any landscaping to be installed within 10 feet of above ground or below ground utilities shall be coordinated with UES.
   b. No blocking or covering of utility equipment and structures.
   c. Below-grade tree root clearances from buried utilities shall be as follows: 10 feet for hardwood trees, three (3) feet for palm trees.
5. During and after all construction work, all utility attributes, including but not limited to: meters, valves (above-grade and underground), manholes, transformers, switchgears, pullboxes, backflow preventers, fire hydrants, lift stations, etc. shall remain clear of spoils, debris, construction materials and equipment, landscaping, etc. The utility operations on campus are a 24-hour-a-day operation; as such, clear access to all utility equipment, structures, and devices must be maintained at all times.
6. Directional Drill, Jack and Bore, and Auger methods shall be looked at as the last option on every project if no other alternatives are available. Proper sub-grade investigation procedures shall be followed prior to execution of work.
7. All reasonable efforts shall be made during the planning and design stages of a project to locate conflicting utilities and attributes and to design work accordingly. Any deviations to these utility construction design standards shall follow the university's Request for Information (RFI) process and be routed through the UCF Project Manager for review and approval by UES.
8. Utility as-builts shall be submitted to, reviewed, and

Division 33 Contents

(cont'd from Page D.33-1)

Electric Service and Meter Installation Requirements

- **General Information**
- **Definitions**
- **Type and Characteristics of Service**
- **Typical Requirements**
- **Three-Phase Pad Mounted Step-Down Transformer Pads**
- **Pullboxes**
- **Meter Location**
- **Current Transformer Installations**
- **Plan Review and Coordination with UCF UES**
- **Duke Energy Service Requirements**
- **Inspection Requirements**

Domestic Water Service and Meter Installation Requirements

- **General Information**
- **Typical Requirements**
- **Metering**
- **Plan Review and Coordination with UCF UES**

(cont'd on Page D.33-3)

accepted by the UES Manager (via the UCF Project Manager) prior to permanent service.

9. Clearances: All utility depths shall be 36 inches minimum to top of utility pipe and 12 inches of clearance shall be maintained between intersecting utilities. Utilities shall not be stacked. 36 inch clearance minimum shall be maintained between off-set parallel utilities.
10. Appropriately colored tracer wire shall be attached to top of all utility piping and shall not "float freely".

Wastewater Service and Installation Requirements

GENERAL INFORMATION

1. UES manages wastewater services throughout the UCF Main Campus. These standards are intended to identify any items that must exceed industry and/or code-required minimums.
2. **CN33-1: Lift station alarm systems must match existing campus SCADA Reporting System.**
3. **CN33-2: Each pumping station control system must match existing campus infrastructure.**
4. For ease of use, this section of the construction standards refers to multiple 8.5"x11" details or Figures. These details are used to convey critical information to the designer, track the designer's progress, and verify the contractor's installation. These details or Figures are referenced in the table below and are intended to be incorporated into the construction documents, by thedesigner, after a detailed review for code and design-intent requirements.

ALL Projects	As Applicable
WW - Figure 00, 01	WW - Figure 02, 03, 04, 05, 06A, 06B, 06C, 07, 08, 09, 10, 11, 12

TYPICAL REQUIREMENTS

1. All pipes must be tested for leakage using current industry standards.
2. Pipes and Pipe Fittings Installation
   - Materials must be cleaned and maintained clean, with all coatings protected from damage. The interior of the pipe must be free of dirt and debris, and when work is not in progress, all open ends must be plugged.
   - Underground pressure piping system located in the traveled way or planned traveled way must be installed with minimum three feet of cover.
   - Exposed systems must be supported as necessary to hold the piping and appurtenances in a firm, substantial manner to the required lines and grades indicated, with no undue piping stresses transmitted to equipment or other items.
   - Piping above ground outside of buildings must be supported from concrete pads.
   - Sanitary manholes must be precast concrete or cast-in-place concrete. Cover and frames must be cast iron U.S. Foundry Casting No. 170 or approved equal. Refer to Figures 08, 11, and 12 at the end of this section for the specific details and instruction on installation of manholes and inlet piping.
   - Cleanouts must be specified as commercially manufactured "Y" branches.
3. Pipes and Pipe Fittings
   - All pipe and fittings must be clearly marked with the name or trademark of the manufacturer, the batch number, the location of the plant, and the strength designation, as applicable.
   - Sanitary sewers must be PVC pipe SDR 26.
4. Piping Not Permitted
   - Corrugated Metal Pipe (CMP) and Vitrified Clay (V.C.), transite and galvanized.
5. Piping Permitted

Division 33 Contents

(cont'd from Page D.33-2)

Field Inspections with UCF UES

Natural Gas Pipeline, Regulator, and Meter Installation Requirements

General Information

Typical Requirements

Metering

Plan Review and Coordination with UCF UES

Chilled Water Service and Meter Installations Requirements

General Information

Typical Requirements

Plan Review and Coordination with UCF UES

Handling

Details for Use in Design and Installation of the Underground Chilled Water System

Piping

Valves

Valve Boxes

Tapping Sleeve, Valves, & Wet Taps

(cont'd on Page D.33-4)

- PVC pipe rated for sanitary applications.
- Connections for pipe three inches in diameter and larger must be rubber compression ring type with restrained joints per American Water Works Association (AWWA) guidelines.

6. Tapping
   - All tapping must be witnessed by the UES representative.
7. Tapping Sleeves and Crosses
   - Units must be of the mechanical joint type, with outlet flange ANSI B16.1, 125 standard, and must be Mueller H-304SS or UES-approved equal must be used.
8. Connections
   - The connection of PVC gravity sewer lines to manholes must be made with a kor-seal connection or a UES-approved equal and "mortared-in." The connector must meet the specification of ASTM C923.
9. Valves
   - All valves must be American-manufactured, and the valve type, size rating, and flow direction arrow must be clearly marked on each unit.
   - All valves shall be fully ported.
   - Hand wheel valves are not permitted below grade.
10. Underground Service (General)
    - All valves must be American-manufactured.
    - Valves must be iron body, epoxy-coated, bronze-mounted, solid wedge, non-rising stem type, and must be equipped with two inch square cast iron wrench nuts.
11. Above Ground Service (General)
    - Valves must be iron body, bronze-mounted gate valves, solid wedge (sewage), with the exception that valves must have an outside screw and yoke (OS&Y), rising stem type.

PUMP STATIONS

1. Refer to Figures 06A, 06B, and 06C for layout and grounding details. Refer to Figure 12 for general notes regarding pump station installation.
2. It is the UCF Project Manager's responsibility to coordinate start-up/commissioning with an independent testing service. UES shall witness the start-up test and be forwarded the results via the UCF Project Manager prior to start of service.

METERING

Metering requirements will be determined on an individual basis as needed.

PLAN REVIEW AND COORDINATION WITH UCF UES

1. Coordination of each wastewater service with UES is important for the success of the project.
2. At the **50% Construction Document Phase** the following shall be shown on plans and reviewed with UES:
   - Design flows, **diversity** factors, and method of computation
   - Methodology used for the **diversity** factors
   - Proposed routing of wastewater service from building to wastewater main
   - All included Figures identified by UCF for the service type. Designer shall identify any aspects of the Figure that cannot or will not be provided.

   All requested Figures shall be submitted to UES, through the UCF Project Manager.
3. At the **100% Construction Document Phase**, the following shall be shown on plans and reviewed with UES:

Division 33 Contents

(cont'd from Page D.33-3)

Cleaning, Flushing, and Passivation

Hydrostatic Pipe Line Testing

Pipe Installation

Pipe Bedding Material

Underground Penetrations Into Buildings

Mechanical Joint Restraints

Service Saddles

Air Release and Isolation Valves

Drain and Air Vents

Thrust Blocks

Accessories

Utility Pipe Cover, Clearances, and Locating Devices

Pressure and Temperature Gauges

Reclaimed Water Service and Meter Installation Requirements

General Information

Metering

Plan Review and Coordination with UES

- Design flows, **diversity** factors, and method of computation
- Methodology for the **diversity** factors

4. The designer shall submit all included Figures identified by UCF for the service type, and shall identify any aspects of the Figure that cannot or will not be provided.
5. All requested Figures shall be submitted to UES, through the UCF Project Manager.

FIELD INSPECTIONS WITH UCF UES

1. All installations in field must be coordinated for witnessing and/or inspections by UCF UES Field Services. Controlled/special inspections must be scheduled via the UES website 48 business hours in advance of requested time.

WW - FIGURE 00: GENERAL NOTES RELATED TO WASTEWATER Rev. 10/30/2017

1. REFER TO RESPONSIBILITY TABLE FOR PARTY DESIGNING, PROVIDING, INSTALLING, TERMINATING AND VERIFYING COMPONENTS.
(A) 2. FLUSHING AND TESTING OF PIPING SYSTEM MUST BE PERFORMED BY THE CONTRACTOR AND WITNESSED BY UCF UES OR A DESIGNATED REPRESENTATIVE.
(B) 3. PIGGING MUST BE PERFORMED FOR WASTEWATER MAINS. THIS WILL NOT BE REQUIRED FOR SERVICE LINES.
(C) 4. ALL UNDERGROUND PIPING MUST BE CAMERA-INSPECTED AND RECORDED. THIS RECORDING MUST BE PROVIDED TO UCF UES.
(D) 5. ALL UTILITIES, VALVES, FITTINGS, PIPES WILL HAVE X, Y AND Z GPS COORDINATES TAKEN AND ATTACHED TO THE AS-BUILTS AS WELL AS PROVIDED IN ELECTRONIC FORMAT AS SPECIFIED BY THE UCF UES GIS MANAGER.
(E) 6. ALL PIPELINES SHALL BE BURIED TO THE GREATEST EXTENT POSSIBLE. MINIMUM COVER FOR THE BURIED PIPELINES SHALL BE 36-INCHES TO THE TOP OF THE PIPE.
(F) 7. WASTE WATER CONNECTIONS SHALL NOT BE OPENED BY UCF UES UNTIL A SCANNED COPY OF THE AS-BUILT DOCUMENTS HAVE BEEN SUBMITTED AND APPROVED BY UCF UES.
(G) 8. DIFFERENT UTILITIES SHALL NOT BE STACKED WITHIN THE SAME TRENCH.

VERIFICATION AREA - PLEASE COMPLETE AND SUBMIT TO UCF UES PRIOR TO 100% CD RELEASE

	Initials	Date
(A)		
(B)		
(C)		
(D)		

	Initials	Date
(E)		
(F)		
(G)		
(H)	NA	NA

	Initials	Date
(I)	NA	NA
(J)	NA	NA
(K)	NA	NA
(L)	NA	NA

	Initials	Date
(M)	NA	NA
(N)	NA	NA
(O)	NA	NA
(P)	NA	NA

WW - FIGURE 01: WASTEWATER RESPONSIBILITY TABLE Rev. 11/17/2017

RESPONSIBILITY TABLE

COMPONENT	DESIGN BY (NOTE 1)	PROVIDED BY	INSTALLED BY	TERMINATED BY	VERIFIED BY
ALL COMPONENTS	SIZE/QTY - UCF LOCATION - EOR, UCF UES	CONTRACTOR	CONTRACTOR	--	EOR & UCF UES

NOTES:
1. WHEN REQUIREMENTS ARE PROVIDED BY UCF UES, THEY SHALL BE CONSIDERED REQUESTS IN ADDITION TO CODE REQUIRED MINIMUMS. ENGINEER OF RECORD (EOR) SHALL REVIEW, CONFIRM APPLICABILITY OF REQUESTS AND INCORPORATE THESE ITEMS INTO THE PROJECT DOCUMENTS AS APPLICABLE.
2. TERMINATION INCLUDES INSTALLATION OF COMPONENTS AND PROPER INSTALLATION OF TRACER WIRE.

WW - FIGURE 02: STANDARD ROADWAY OPEN CUT DETAIL

Rev. 7/10/2019

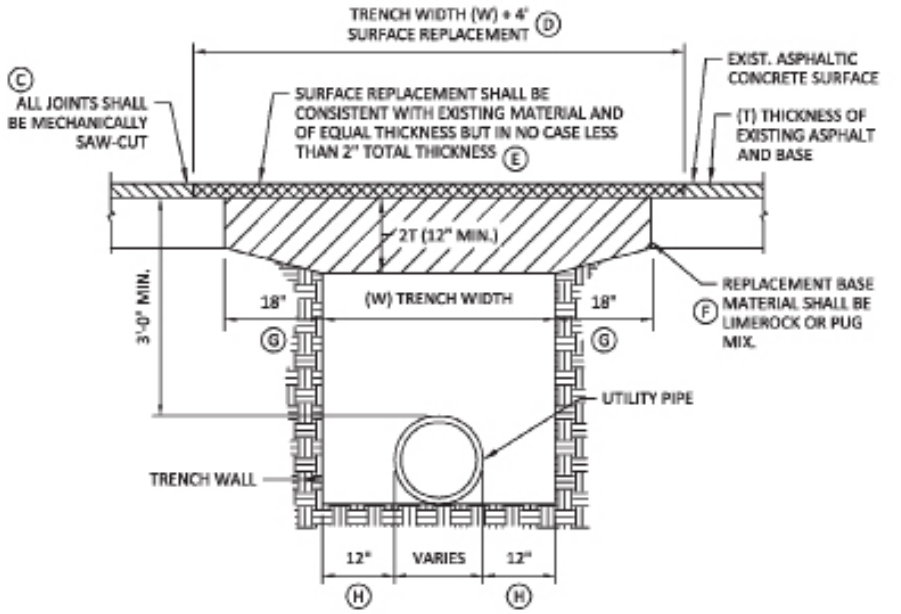

NOTES:

(A) 1. BACKFILL SHALL BE PLACED IN 6" LAYERS FROM BENEATH THE HAUNCHES OF THE PIPE TO THE BASE AND COMPACTED TO 98% DENSITY PER AASHTO T-180 MODIFIED PROCTER.

(B) 2. BASE MATERIALS SHALL BE PLACED IN TWO OR THREE LAYERS ROLLED AND TAMPED TO ABOVE SPECIFIED DENSITY.

VERIFICATION AREA - PLEASE COMPLETE AND SUBMIT TO UCF UES PRIOR TO 100% CD RELEASE

	Initials	Date		Initials	Date		Initials	Date		Initials	Date
(A)			(E)			(I)	NA	NA	(M)	NA	NA
(B)			(F)			(J)	NA	NA	(N)	NA	NA
(C)			(G)			(K)	NA	NA	(O)	NA	NA
(D)			(H)			(L)	NA	NA	(P)	NA	NA

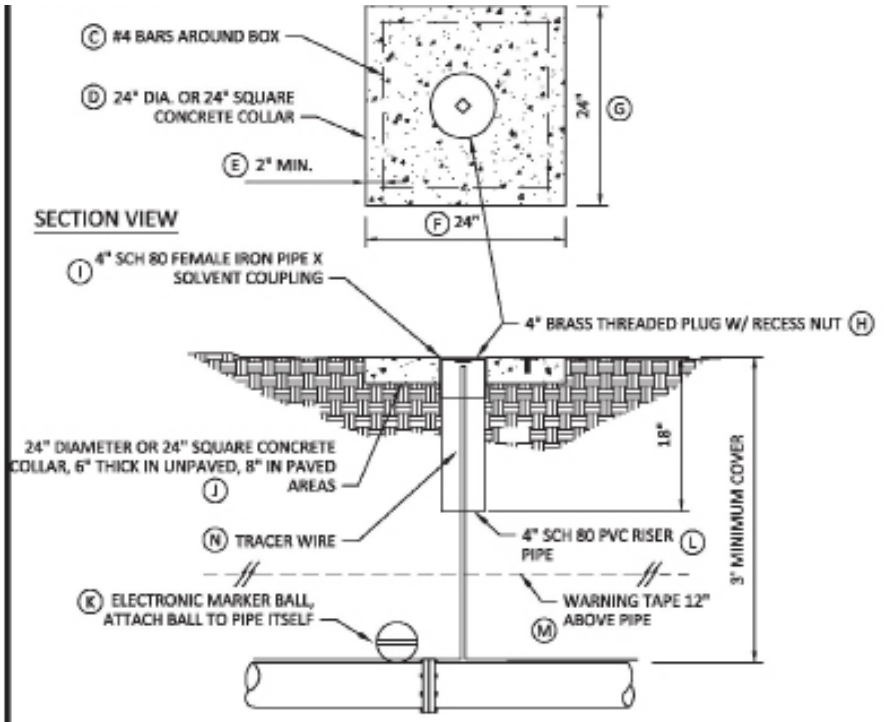

NOTES:

(A) 1. LOCATING WIRE TERMINAL SHALL BE PROVIDED ALONG BURIED UTILITY WHERE DISTANCE BETWEEN VALVE BOXES EXCEEDS 300 FEET. LOCATING WIRE TERMINAL SHALL BE PROVIDED AT 300 FOOT INTERVALS NOT GREATER THAN 300 FEET IN THESE INSTANCES.

(B) 2. LOCATOR WIRE ACCESS - 4" SCHEDULE 80 PVC, FEMALE ADAPTER COUPLING AND 4" BRASS PLUG WITH RECESSED NUT. TERMINATE INSULATED, SOLID 10 GAUGE COPPER LOCATOR WIRES AT TOP WITH 12" OF EXTRA WIRE. INSULATED WIRE SHALL BE COLOR CODED.

VERIFICATION AREA - PLEASE COMPLETE AND SUBMIT TO UCF UES PRIOR TO 100% CD RELEASE

	Initials	Date		Initials	Date		Initials	Date		Initials	Date
(A)			(F)			(K)			(P)	NA	NA
(B)			(G)			(L)			(Q)	NA	NA
(C)			(H)			(M)			(R)	NA	NA
(D)			(I)			(N)			(S)	NA	NA
(E)			(J)			(O)	NA	NA	(T)	NA	NA

WW - FIGURE 04: VALVE & VALVE BOX DETAIL

Rev. 10/30/2017

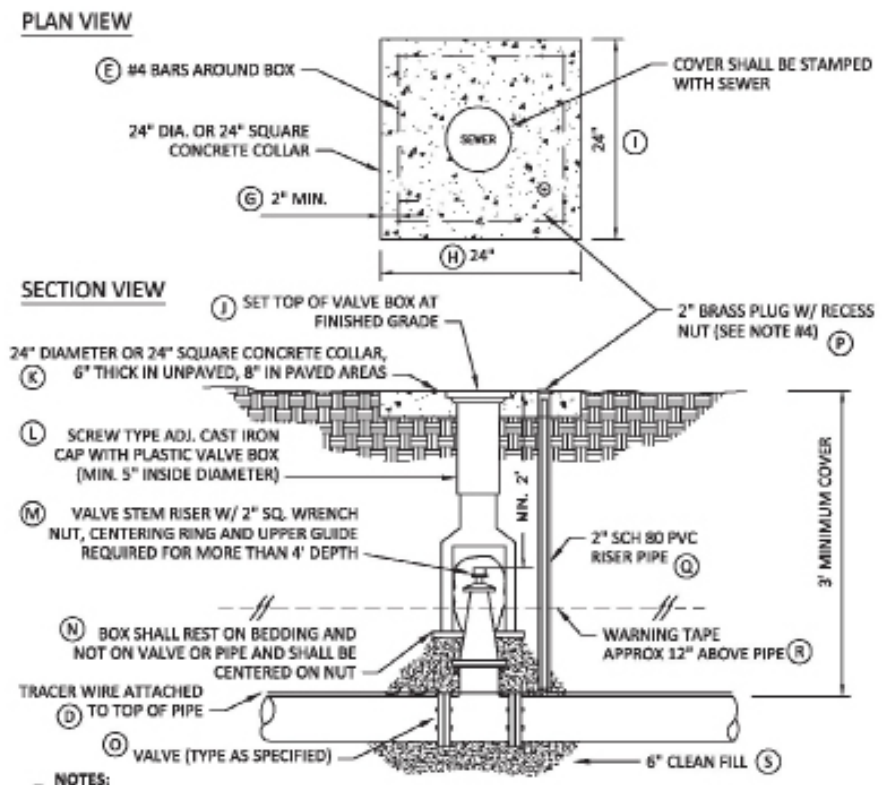

NOTES:

(A) 1. VALVES SHALL NOT BE LOCATED IN STREET CURBS.
(B) 2. VALVE COVERS SHALL BE PAINTED GREEN FOR SEWER.
(C) 3. LOCATOR WIRE ACCESS - 2" SCHEDULE 80 PVC, FEMALE ADAPTER COUPLING AND 2" BRASS PLUG WITH RECESSED NUT. TERMINATE INSULATED TRACER WIRES AT TOP WITH 12" OF EXTRA WIRE.

VERIFICATION AREA - PLEASE COMPLETE AND SUBMIT TO UCF UES PRIOR TO 100% CD RELEASE

	Initials	Date		Initials	Date		Initials	Date		Initials	Date
(A)			(F)			(K)			(P)		
(B)			(G)			(L)			(Q)		
(C)			(H)			(M)			(R)		
(D)			(I)			(N)			(S)		
(E)			(J)			(O)			(T)	NA	NA

WW - FIGURE 05: WASTEWATER MAIN WET TAP

Rev. 10/30/2017

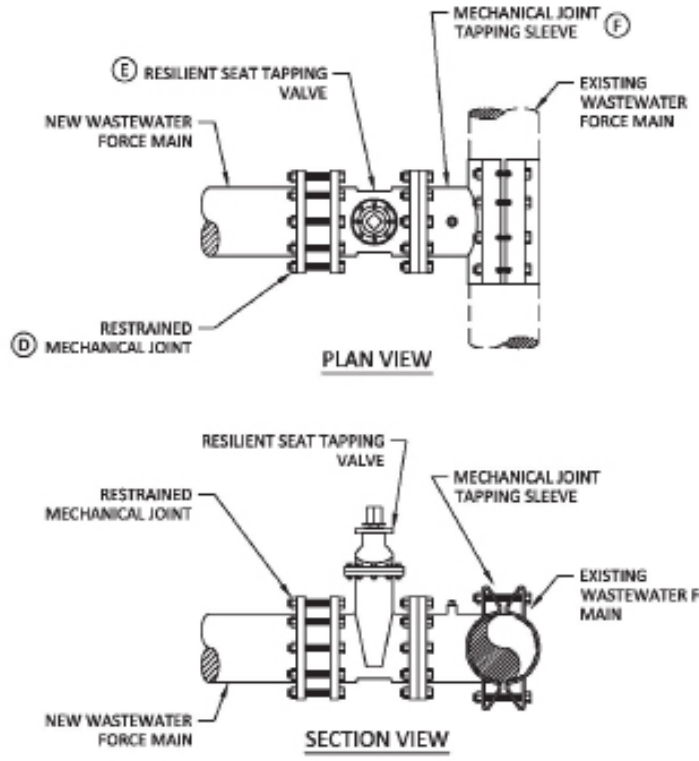

NOTES:

(A) 1. ALL TAPPING SHALL BE WITNESSED BY UCF UES OR A DESIGNATED REPRESENTATIVE. THE INSTALLING CONTRACTOR SHALL NOTIFY UCF UES AT LEAST 48 HRS PRIOR TO THE START.
(B) 2. TAPPING SLEEVES UTILIZE MECHANICAL JOINTS, WITH OUTLET FLANGE ANSI B16.1 125 STANDARD, AND MUST BE MUELLER H-304SS OR UCF UES APPROVED EQUAL.

VERIFICATION AREA - PLEASE COMPLETE AND SUBMIT TO UCF UES PRIOR TO 100% CD RELEASE

	Initials	Date		Initials	Date		Initials	Date		Initials	Date
(A)			(E)			(I)	NA	NA	(M)	NA	NA
(B)			(F)			(J)	NA	NA	(N)	NA	NA
(C)	NA	NA	(G)	NA	NA	(K)	NA	NA	(O)	NA	NA
(D)			(H)	NA	NA	(L)	NA	NA	(P)	NA	NA

WW - FIGURE 06A: PUMP STATION GROUNDING DETAIL - PART 1 OF 3

Rev. 11/17/2016

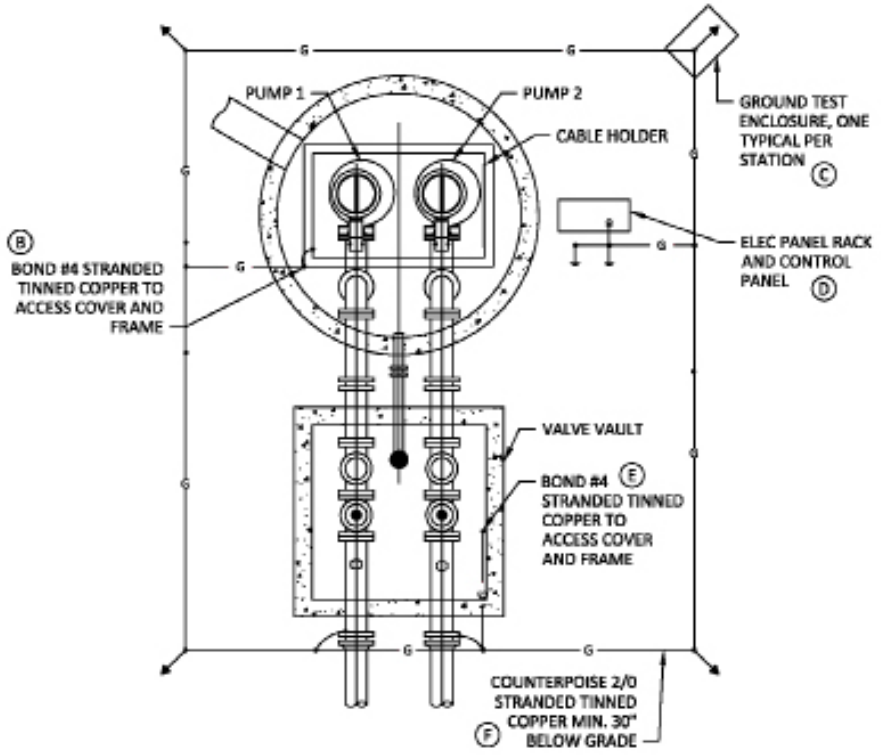

NOTES:

1. DETAIL IS DIAGRAMMATIC. SPECIFIC LOCATIONS OF EQUIPMENT MAY VARY.
(A) 2. PROVIDE EXOTHERMIC WELDS UNLESS NOTED OTHERWISE.

VERIFICATION AREA - PLEASE COMPLETE AND SUBMIT TO UCF UES PRIOR TO 100% CD RELEASE

	Initials	Date
(A)		
(B)		
(C)		
(D)		

	Initials	Date
(E)		
(F)		
(G)	NA	NA
(H)	NA	NA

	Initials	Date
(I)	NA	NA
(J)	NA	NA
(K)	NA	NA
(L)	NA	NA

	Initials	Date
(M)	NA	NA
(N)	NA	NA
(O)	NA	NA
(P)	NA	NA

WW - FIGURE 06B: PUMP STATION GROUNDING DETAIL - PART 2 OF 3

Rev. 11/17/2016

GROUND TEST WELL PLAN VIEW

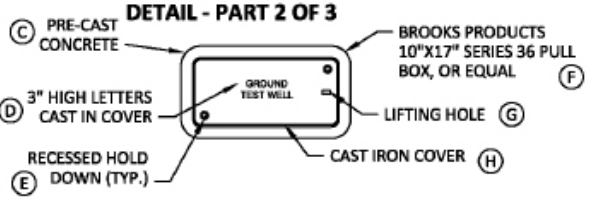

GROUND TEST WELL SECTION VIEW

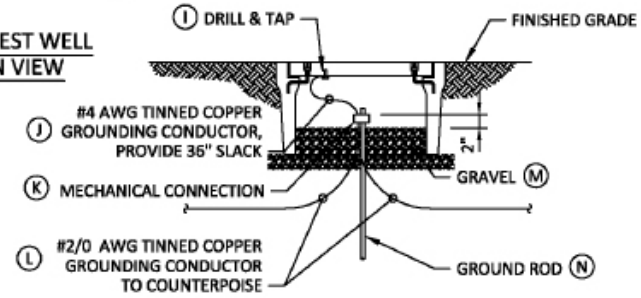

COVER AND DOOR GROUNDING

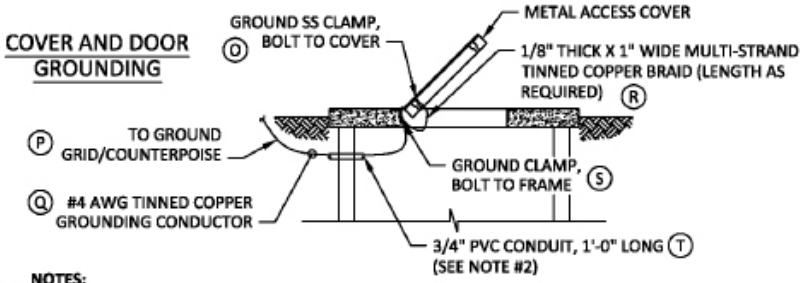

NOTES:

(A) 1. ON COVERS WITH MULTIPLE DOORS, PROVIDE BRAID FROM FRAME TO DOOR ON EACH DOOR PROVIDE WATERPROOF CAULKING WHERE GROUND CABLE AND CONDUIT PENETRATES WETWELL TO PREVENT INTRUSION OF GROUNDWATER AND ESCAPE OF VAPORS FROM THE WET WELL.
(B) 2. INSTALL GROUND WIRE SO THAT IT WILL NOT CROSS CLEAR OPENING OR PREVENT OR IMPEDE NORMAL METHOD OF REMOVING FLOATS OR PUMPS

VERIFICATION AREA - PLEASE COMPLETE AND SUBMIT TO UCF UES PRIOR TO 100% CD RELEASE

	Initials	Date
(A)		
(B)		
(C)		
(D)		
(E)		

	Initials	Date
(F)		
(G)		
(H)		
(I)		
(J)		

	Initials	Date
(K)		
(L)		
(M)		
(N)		
(O)		

	Initials	Date
(P)		
(Q)		
(R)		
(S)		
(T)		

WW - FIGURE 06C: PUMP STATION GROUNDING DETAIL - PART 3 OF 3

Rev. 11/17/2016

GATE POST GROUNDING (TYPICAL)

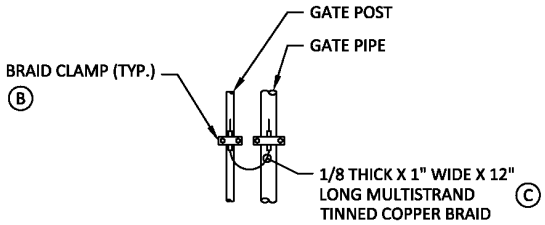

FENCE POST GROUNDING (TYPICAL)

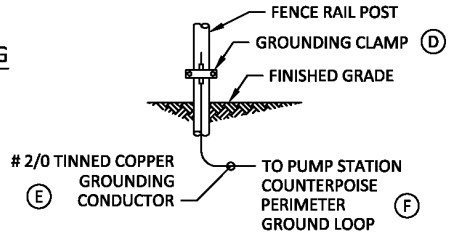

NOTES:

A 1. PLACEHOLDER FOR FUTURE NOTES.

VERIFICATION AREA - PLEASE COMPLETE AND SUBMIT TO UCF UES PRIOR TO 100% CD RELEASE

	Initials	Date		Initials	Date		Initials	Date		Initials	Date
A			E			I	NA	NA	M	NA	NA
B			F			J	NA	NA	N	NA	NA
C			G	NA	NA	K	NA	NA	O	NA	NA
D			H	NA	NA	L	NA	NA	P	NA	NA

WW - FIGURE 07: GREASE INTERCEPTOR

Rev. 11/17/2016

PLAN VIEW

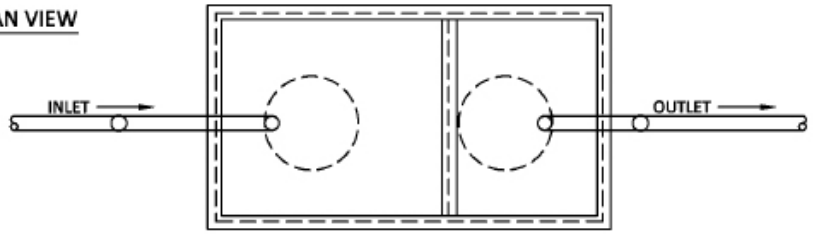

SECTION VIEW

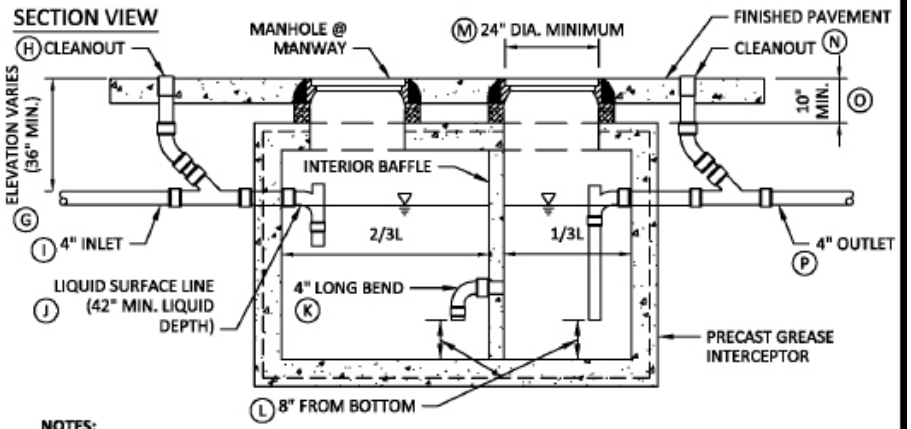

NOTES:

A 1. SPECIFIC DESIGN DETAILS MUST IN ALL ASPECTS MEET APPLICABLE FLORIDA PLUMBING AND ADMINISTRATIVE CODE.

B 2. SIZE GREASE INTERCEPTOR PER SEMINOLE COUNTY MANUAL. MINIMUM SIZE 750 GAL; MAXIMUM SIZE 1250 GAL.

C 3. INTERCEPTORS SHALL BE WATER AND GAS TIGHT.

D 4. ALL FIXTURES LOCATED IN FOOD AND BEVERAGE PREPARATION AREAS SHALL BE ROUTED THROUGH GREASE INTERCEPTOR . RESTROOM WASTE SHALL NOT BE ROUTED THROUGH INTERCEPTOR.

E 5. BAFFLE REQUIRED; ALTERNATIVE DESIGNS ARE ACCEPTABLE. DESIGN MUST MEET FLORIDA PLUMBING AND ADMINISTRATIVE CODE.

F 6. LOADS: h-20 TRUCK WHEELS WITH 30% IMPACT PER AASHTO. TRAFFIC BEARING FRAME AND COVER TO MEET FDOT STANDARDS, IF APPLICABLE.

VERIFICATION AREA - PLEASE COMPLETE AND SUBMIT TO UCF UES PRIOR TO 100% CD RELEASE

	Initials	Date		Initials	Date		Initials	Date		Initials	Date
A			E			I			M		
B			F			J			N		
C			G			K			O		
D			H			L			P		

WW - FIGURE 08: PRECAST CONCRETE MANHOLE

Rev. 7/1/2019

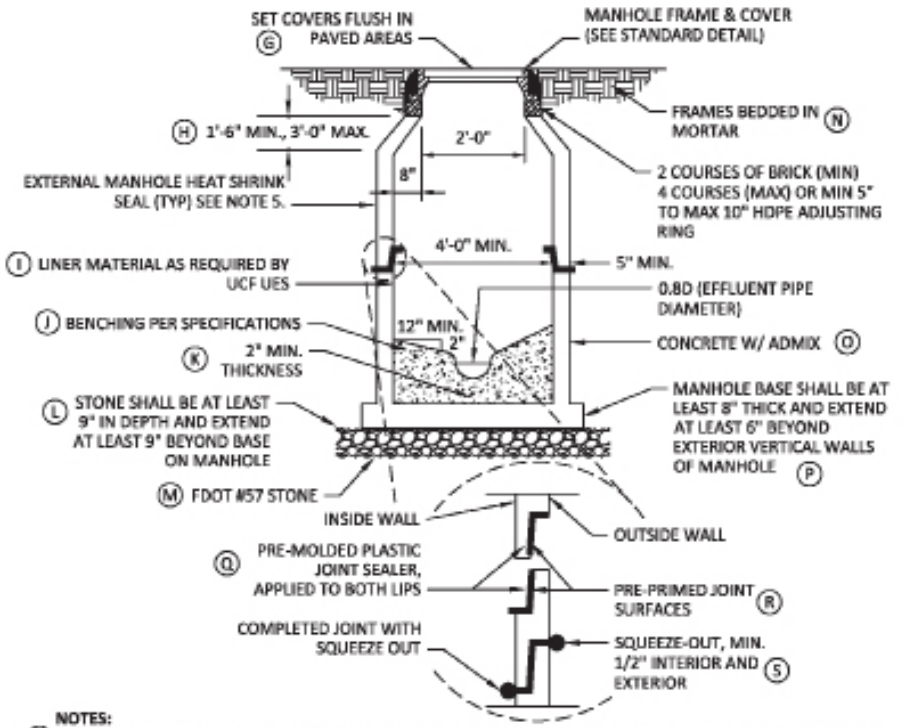

NOTES:

(A) 1. DROP CONNECTIONS ARE REQUIRED WHENEVER INVERT OF INFLUENT SEWER IS 24" OR MORE ABOVE THE INVERT OF THE MANHOLE. SEE MANHOLE CONNECTION FIGURE 11 FOR DETAIL.
(B) 2. ECCENTRIC CONE DESIGN MAY BE USED FOR CONFLICT RESOLUTION WITH UCF UES PRE-APPROVAL.
(C) 3. A FLOW CHANNEL SHALL BE CONSTRUCTED INSIDE MANHOLE TO DIRECT INFLUENT INTO FLOW STREAM.
(D) 4. LIFT HOLES THROUGH STRUCTURE ARE NOT PERMITTED.
(E) 5. WRAP TIGHTLY AROUND CASTING JOINTS AND APPLY HIGH INTENSITY PROPANE TORCH TO EFFECTIVELY SEAL THEM FROM GROUND WATER INFILTRATION.
(F) 6. HDPE ADJUSTING RINGS MAY BE SUBSTITUTED FOR BRICK RISERS.

VERIFICATION AREA - PLEASE COMPLETE AND SUBMIT TO UCF UES PRIOR TO 100% CD RELEASE

	Initials	Date		Initials	Date		Initials	Date		Initials	Date
(A)			(F)			(K)			(P)		
(B)			(G)			(L)			(Q)		
(C)			(H)			(M)			(R)		
(D)			(I)			(N)			(S)		
(E)			(J)			(O)			(T)	NA	NA

WW - FIGURE 09: GAUGE DIAPHRAGM ASSEMBLY

Rev. 11/17/2016

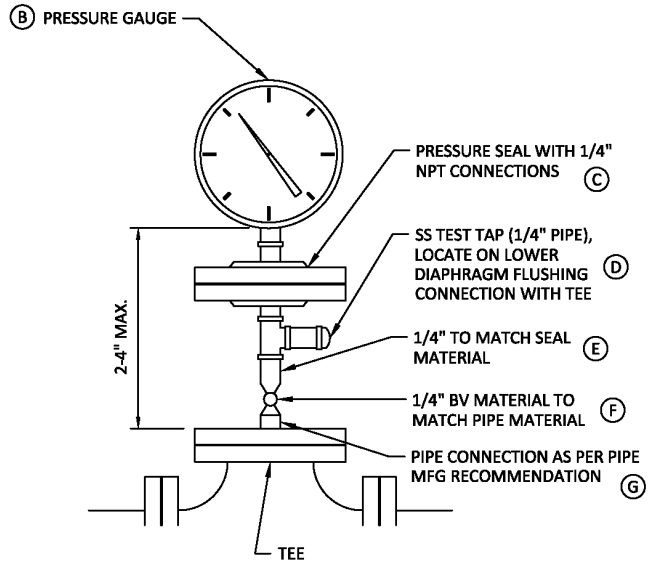

NOTES:

(A) 1. PLACEHOLDER FOR FUTURE NOTES.

VERIFICATION AREA - PLEASE COMPLETE AND SUBMIT TO UCF UES PRIOR TO 100% CD RELEASE

	Initials	Date		Initials	Date		Initials	Date		Initials	Date
(A)			(E)			(I)	NA	NA	(M)	NA	NA
(B)			(F)			(J)	NA	NA	(N)	NA	NA
(C)			(G)			(K)	NA	NA	(O)	NA	NA
(D)			(H)	NA	NA	(L)	NA	NA	(P)	NA	NA

WW - FIGURE 10: FORCED MAIN TO GRAVITY SEWER CONNECTION Rev. 7/1/2019

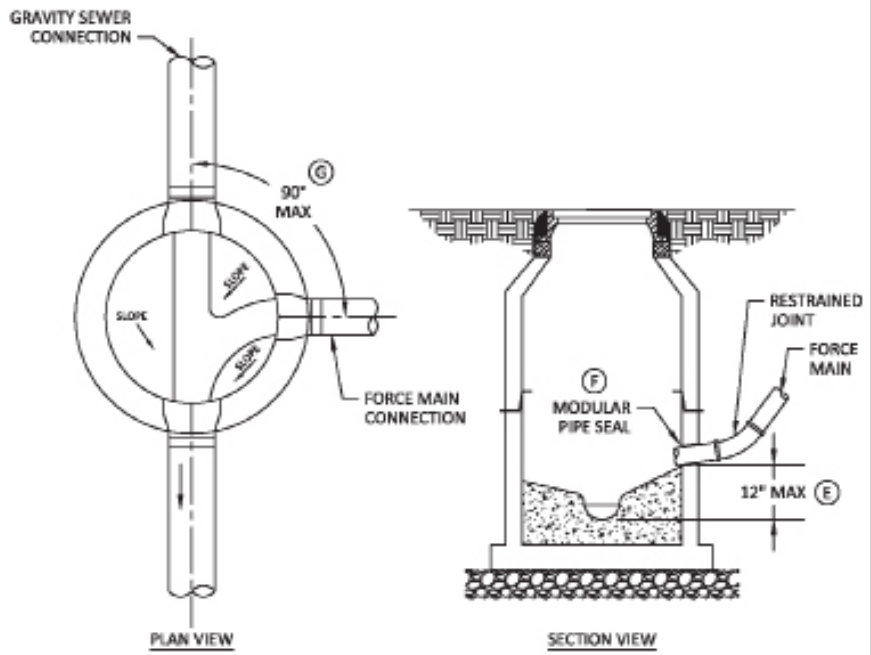

NOTES:

(A) 1. FORCE MAIN ORIENTED TO FACILITATE FLOW AND SHALL ENTER MANHOLE WITHIN 12" ABOVE INVERT OF THE EFFLUENT PIPE.

(B) 2. BENCH AS REQUIRED FOR NEW FORCE MAIN.

(C) 3. MANHOLE RECEIVING FORCE MAIN AND NEXT MANHOLE SHALL BE LINED. FOR CONNECTIONS TO EXISTING MANHOLES, MANHOLE RECEIVING FORCE MAIN AND NEXT MANHOLE SHALL BE COATED OR LINED PER FIGURE 08.

(D) 4. CONTRACTOR TO COORDINATE THE PRESENCE OF UTILITIES INSPECTOR DURING CORING AND CONNECTIONS TO EXISTING MANHOLES.

VERIFICATION AREA - PLEASE COMPLETE AND SUBMIT TO UCF UES PRIOR TO 100% CD RELEASE

	Initials	Date		Initials	Date		Initials	Date		Initials	Date
A			F			K	NA	NA	P	NA	NA
B			G			L	NA	NA	Q	NA	NA
C			H	NA	NA	M	NA	NA	R	NA	NA
D			I	NA	NA	N	NA	NA	S	NA	NA
E			J	NA	NA	O	NA	NA	T	NA	NA

WW - FIGURE 11: GRAVITY MANHOLE CONNECTION Rev. 7/1/2019

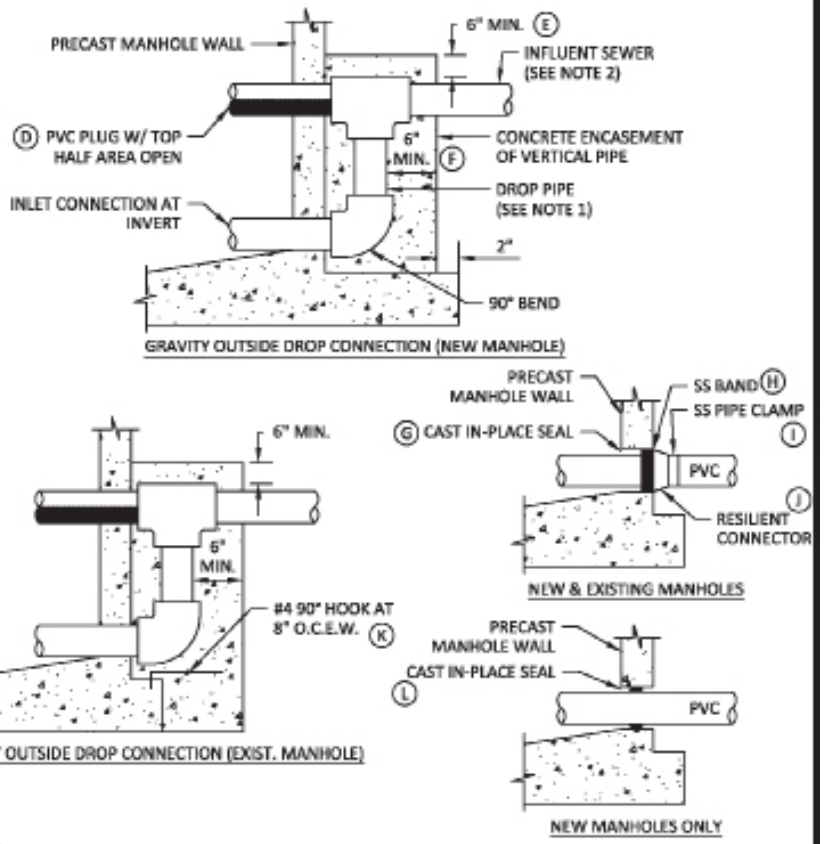

NOTES:

(A) 1. DROP PIPE AND FITTINGS SHALL BE OF EQUAL SIZE AND MATERIAL AS THE INFLUENT SEWER.

(B) 2. AN OUTSIDE DROP CONNECTION SHALL BE REQUIRED FOR ALL INFLUENT LINES WHICH HAVE AN INVERT 24" OR MORE ABOVE THE MANHOLE INVERT.

(C) 3. CONTRACTOR TO COORDINATE THE PRESENCE OF UTILITIES INSPECTOR DURING CORING AND CONNECTIONS TO EXISTING MANHOLES.

VERIFICATION AREA - PLEASE COMPLETE AND SUBMIT TO UCF UES PRIOR TO 100% CD RELEASE

	Initials	Date		Initials	Date		Initials	Date		Initials	Date
A			F			K			P	NA	NA
B			G			L			Q	NA	NA
C			H			M	NA	NA	R	NA	NA

WW - FIGURE 12: PUMP STATION GENERAL NOTES

Rev. 7/1/2019

(A) 1. GRAVITY PIPES ENTERING WET WELL SHALL BE MADE WATERTIGHT WITH AN APPROVED RESILIENT CONNECTOR AS SHOWN IN FIGURE 11.

(B) 2. ALL LOCATIONS WHERE PRESSURE PIPES PENETRATE THE WET WELL SHALL BE MADE WATERTIGHT WITH A WALL SLEEVE AND COMPRESSION SEAL.

(C) 3. THERE SHALL BE NO VALVES OR ELECTRICAL JUNCTION BOXES IN THE WET WELL.

(D) 4. WET WELL COVERS SHALL BE ALUMINUM WITH 316 STAINLESS STEEL HARDWARE AND RECESSED LOCK BRACKET. WET WELL COVER SHALL HAVE "CONFINED SPACE" ETCHED OR WELDED INTO COVER.

(E) 5. ALL HARDWARE IN WET WELL SHALL BE 316 STAINLESS STEEL.

(F) 6. PUMP MANUFACTURER SUBMERGENCE REQUIREMENTS SHALL BE MET AS A MINIMUM.

(G) 7. PIPE JOINTS IN THE WET WELL AND THE VALVE VAULT SHALL BE FLANGED. PIPE JOINTS FROM THE VALVE VAULT TO THE EXISTING FORCE MAIN SHALL BE RESTRAINED MECHANICAL JOINTS.

(F) 8. CHECK VALVE ARMS SHALL BE LOCATED WITH THE SAME ORIENTATION (I.E. ALL ARMS ON THE LEFT SIDE OF VALVE.)

9. REFER TO FIGURE 08 FOR ADMIX, COATINGS AND LININGS.

VERIFICATION AREA - PLEASE COMPLETE AND SUBMIT TO UCF UES PRIOR TO 100% CD RELEASE

	Initials	Date
(A)		
(B)		
(C)		
(D)		

	Initials	Date
(E)		
(F)		
(G)	NA	NA
(H)	NA	NA

	Initials	Date
(I)	NA	NA
(J)	NA	NA
(K)	NA	NA
(L)	NA	NA

	Initials	Date
(M)	NA	NA
(N)	NA	NA
(O)	NA	NA
(P)	NA	NA

Electric Service and Meter Installation Requirements

GENERAL INFORMATION

1. Duke Energy maintains the Main Campus Primary Loop and associated step down transformers; therefore, Duke Energy's standards and requirements shall be considered the minimum standard for all new and existing service modifications. Division 33 standards identify items that must exceed Duke's minimum requirements, as well as any minimum code requirements.
2. Electric meters and sub-meters are used for utility billing, savings calculations, demand profiling, and performance monitoring. An accurate, properly-selected and installed system is essential to these functions. The following information pertains to "low voltage" services (600V and under) unless otherwise specified.
3. For services greater than 600V, please contact UES directly for specific requirements.
4. Electric utility requirements, such as conduit for primary conductors and concrete requirements for pad-mounted transformers, will be dictated by Duke Energy's minimum standards; however, UCF has provided a few additional items through the included details.
5. For ease of use, this section of the construction standards refers to multiple 8.5"x11" details or Figures. These details are used to convey critical information to the designer, track the designer's progress, and verify the contractor's installation. These details or Figures will be referenced below and are intended to be incorporated into the construction documents by the designer, after a detailed review for code and design-intent requirements.

Definitions

1. Low Voltage: Up to 600V (AC)
2. Medium Voltage: 1kV – 35kV (AC)
3. High Voltage: Greater than 35kV (AC)
4. Main Distribution Panel Meter: Switchgear/panel-mounted meter covering complete main service to the entire facility
5. Billing Electric Meter: Main exterior mount revenue/billing meter for each main service to a facility
6. Billing Electric Sub-Meter: Meter installed on a portion of the main facility's electrical distribution, downstream of the main facility meter; primarily used to measure electric consumption for billing purposes
7. BAS Electric Meter: Meter installed for main service or on a portion of the main facility's electrical distribution, downstream of the main facility's meter; primarily monitored through BAS for specific loads related to lighting, chilled water equipment and plug-load circuits
8. MCC (Motor Control Center): Assembly of one or more enclosed sections having a common power bus and containing motor control units
9. Switch Gear: Combination of electrical disconnect switches, fuses, or circuit breakers used to control, protect and isolate electrical equipment
10. Utility Transformer: Any pole-mount or pad-mount distribution transformer providing the final voltage transformation in the electric power distribution system, stepping down the voltage used in the distribution lines to the level used by the customer
11. CT (Current Transformer): Also known as instrument transformer, an apparatus used to reduce the primary current accurately proportional to the current in the circuit, allowing for convenient connections to measuring and sensing equipment
12. PT (Potential Transformer): Also called voltage transformers (VT), potential transformers (PT) are a type of instrument transformer, used for metering and protection in high

voltage circuits or phasor phase shift isolation. They are designed to present negligible load to the supply being measured and to have an accurate voltage ratio to enable accurate metering.

TYPE AND CHARACTERISTICS OF SERVICE

1. Services shall be underground. Overhead services are not permitted.
2. Standard voltages shall be 120/240, 120/208, and 277/480.
3. All new services shall be 277/480V 3-Phase 4-Wire, with the following exceptions:
   - 120/208V 3-Phase is acceptable if service is 400A or less at specified voltage.
   - 120/240V 1-Phase is acceptable for temporary services, unoccupied structures, and auxiliary equipment if service is 400A or less at specified voltage, e.g. construction trailer, illuminated signs, or irrigation controllers.
4. Use the table below to locate the service type being provided, then refer to the Figures indicated. These Figures are intended to be incorporated into the construction documents, as referenced in the section above.

Circuit	Voltage	Service Size (Amps)	Current Connections	Figures to Include
2- wire, 1-phase	120	Up to 400A	Self-contained	Figure #00, 01, 02. 03B, 04A, 05, 10, (11 or 12), 13
3-wire, 1-phase	120/240	Up to 400A	Self-contained	Figure #00, 01, 02, 03B, 04B, 05, 10, (11 or 12), 13
		Over 400A	With CTs	Figure #00, 01, 02, 03A or 03B, or 03C, 04C, 06, 07, 08, 09, 10, (11 or 12), 13
3-wire network	120/208	Up to 400A	Self-contained	Figure #00, 01, 02, 03B, 05, 10, (11 or 12), 13
		Over 400A	With CTs	Figure #00, 01, 02, 03A or 03B or 03C, 04C, 06, 07, 08, 09, 10, (11 or 12), 13
4-wire wye	120/208 or 277/480	Up to 400A	Self-contained	Figure #00, 01, 02, 03B, 04D, 05, 10, (11 or 12), 13
		Over 400A	With CTs	Figure #00, 01, 02, 03A or 3B or 03C, 04C, 06, 07, 08, 09, 10, (11 or 12), 13
	Over 600V			Coordinate directly with UCF UES & Duke
For services over 200A, a meter with CTs may be used in lieu of a self-contained meter.				

5. Temporary Service
   - This is a service that will be temporarily installed and energized for short-term use involving project/contracted work services until project completion. Service is not utilized in any way as a “permanent” facility service, and will be coordinated for disconnection and removal at the completion of the project (e.g., temporary construction trailer or site power for project work).
   - Temporary services to construction trailers or site power for projects that are building expansions must not be serviced off an existing facility’s circuit(s). All temporary connections must be direct from the utility company transformer for site power or construction trailers. If this is not feasible, a generator must be used for temporary power during construction.
   - Facilities under construction, that are connected to any existing facility as an “expansion” or added space, must have all construction-related circuits separately sub-metered for billing purposes. Sub-metered use will be subtracted from the original building’s main service meter. It is the responsibility of the project/contractor to fund any power consumption directly related to the

project, even in existing building expansions.

- Temporary services shall follow the same requirements outlined in these construction standards.

6. Permanent Service
   - A permanent service is conductors installed for purpose of supplying main power feed to newly renovated or constructed facility, site, or structure.
   - Permanent service, upon final approval for Certificate of Occupancy, will transfer responsibility of service from the project or contractor to the final end customer.
   - Separate physical structures must have separate utility services (distributions) originating from the Utility Company transformer. At no point should any facility be fed from an individual circuit downstream of a main service on another facility, causing a condition for sub-metered loads and split billing.

TYPICAL REQUIREMENTS

1. Electrical rooms must be located along an exterior main wall with the electric meter installed on the exterior of the building.
2. If the electrical room, by design, cannot be located along an exterior wall, and distance is greater than 50 linear feet from meter enclosure to current transformers, the meter must be installed in one of two ways:
   - Exterior Wall Mount (Meter & CT Enclosure)
     - Primary conductors from utility transformer to site must be routed through a wall-mounted CT cabinet.
     - A primary disconnect must follow the CT cabinet before entering the main electrical room.
   - Exterior Concrete Post Mount (Meter & CT Enclosure)
     - If a pad-mounted transformer is serving only the single facility, the metering can be performed by using CTs installed on the secondary bushing of the transformer. If this metering configuration is used, the meter must be mounted on a concrete post adjacent to the transformer.
3. Any electrical equipment or enclosures on an exterior wall or post-mount structure must be obstructed from view; however, clearances must be provided for all equipment routine maintenance and servicing. Proposals for either landscaping shrubbery or material structures used to block the sight of such equipment must be submitted to the University Master Planning Committee (UMPC) for approval. Requests must be routed through the Project Manager. Any proposed landscaping must consider the requested equipment clearances when plants are mature.

THREE-PHASE PAD MOUNTED STEP-DOWN TRANSFORMER PADS

1. The contractor is responsible for providing and installing the concrete three-phase pad-mounted transformer pad according to Duke Energy specifications. The customer may choose to construct (cast-in-place) the pad on-site or purchase and install a pre-cast pad from an approved supplier. The customer must provide and install the primary and secondary conduits into the window opening of the pad according to Duke Energy specifications.
2. The contractor is responsible for contacting UES Field Services to coordinate a Duke Energy Represenatative to inspect and approve the pad to be used. If using a precast pad, contact UES after the installation so that the correct pad can be confirmed and verified that it is in the correct location and level. If constructing the pad on-site, the Duke Energy Representative must inspect the form of the pad, including rebar, prior to pouring the concrete.
3. The contractor is responsible to contact UES Field Services to inspect all primary conduit installation.

PULLBOXES

1. Pullbox installation and locations will be determined by project needs and Duke Energy requirements.

METER LOCATION

1. The location of meters is an important consideration to both the UES and the project. UES shall always be consulted and shall endeavor to select a location that shall be the most suitable to both parties.
2. Metering shall normally be installed outdoors. Exceptions to this must be approved by UES prior to installation.
3. Meter, CT cabinet (if applicable), CT location, utility transformer, primary conductors, secondary conductors, and conduit from CTs to the meter shall be shown on civil and electrical site plan, for coordination purposes.
4. The contractor is responsible for informing UES of the number, size, and type of secondary conductors that will be installed.
5. Any equipment in or mounted on the building shall be shown on electrical building floor plans.
6. All site lighting and equipment outside of a building shall be on a separate electric service and meter.

CURRENT TRANSFORMER INSTALLATIONS

1. The size and type of each current transformer shall be reviewed with and approved by UES.
2. Current transformer installations are usually made by one of three means, each of which requires coordination between the Contractor and UES:
    - Self-contained meters where service conductors are fed directly through meter socket
    - Outdoor current transformer cabinets where a self-contained meter cannot be used and pad-mounted CTs cannot be used
    - Current transformers shall be located in pad-mounted transformers where a service is too large for a self-contained meter or CT cabinet and the transformer only services one building

PLAN REVIEW AND COORDINATION WITH UCF UES

1. Coordination of service and metering requirements with UES is important for the success of the project. UES will arrange joint meetings with all pertinent parties including UES, Duke Energy, the designer, the contractor, etc. at each phase of project.
2. At the **50% Construction Document Phase**, the following shall be shown on plans and reviewed with UES:
    - Proposed location of pad-mounted transformer
    - Proposed routing of primary conduit and conductors to new transformer
    - Proposed routing of service entrance conduits/ conductors
    - Proposed location of meter
    - Proposed metering arrangement
    - All included Figures identified by UCF for the service type. Designer shall identify any aspects of the Figure that cannot or will not be provided
3. At the **100% Construction Document Phase**, the following shall be shown on plans and reviewed with UES:
    - Location of pad mounted transformer
        - **Transformer pad details coordinated with Duke Energy through UCF UES**
    - Routing of primary to new transformer.
        - Primary conduit sizing
        - Primary conduit installation details
        - Pullboxes
    - Routing of service entrance conduits/conductors
        - Sizes of conductors and conduits

    - Load sizing calculations
- Location of meter enclosure
    - Metering arrangement including:
        - Specific models and specifications of CTs to be utilized if applicable
        - Mounting method for CTs as applicable
        - Size and specifications for CT cabinet as applicable
        - Routing and size of conduits and wiring interconnecting CTs with meter enclosure
        - Specific models and specification of meter enclosure
- All included Figures identified by UCF for the service type. Designer shall identify any aspects of the Figure that cannot or will not be provided. All requested Figures shall be submitted to UES through the UCF Project Manager at the 50% and 100% construction document submission.

DUKE ENERGY SERVICE REQUIREMENTS

1. Refer to Duke Energy Requirements for Electric Service and Meter Installations Book for full details: https://www.duke-energy.com/partner-with-us/builders-developers-and-contractors/construction-toolbox.

INSPECTION REQUIREMENTS

- A passing and signed pre-power electrical inspection (Request to Energize form found on UES's and EH&S's websites) and a grounding system test with a 5 ohm or less reading must be completed for energization.
- For services of a higher load requirement or of a critical nature, a signed Letter of Attestation from the Engineer of Record (EOR) must be submitted alongside the signed pre-power inspection form.
- All aspects of electrical utility construction are subject to inspection by UES/Duke Energy personnel. Contact UES Field Services for detailed information and to coordinate inspections.

FIGURE 00: GENERAL NOTES RELATED TO ELECTRIC SERVICE

Rev. 7/1/2019

1. REFER TO RESPONSIBILITY TABLE FOR PARTY DESIGNING, PROVIDING, INSTALLING, TERMINATING AND VERIFYING COMPONENTS.
(A) 2. WORK ORDERS TO REQUEST CURRENT TRANSFORMERS, POTENTIAL TRANSFORMERS, METER AND METER ENCLOSURE MUST BE SUBMITTED AT LEAST 13-WEEKS PRIOR TO DESIRED DELIVERY DATE. THE FORM FOR REQUESTING THIS INFORMATION CAN BE LOCATED AT HTTP://WWW.PP.UCF.EDU. SEARCH THE MENU FOR "MISCELLANEOUS FORMS AND UTILITY CONNECTIONS".
(B) 3. ALL ELECTRICAL CONNECTIONS MUST BE MADE BY A LICENSED JOURNEYMAN ELECTRICIAN.
(C) 4. RENOVATIONS WHERE THE SERVICE SIZE TO EXISTING FACILITIES NEEDS TO BE INCREASED AND CONTINUED THROUGH EXISTING METERING FROM ONE CLASS TO ANOTHER (EXAMPLE: CL200 TO CL320) MUST CONFIRM THAT THE METER AND METER ENCLOSURE WILL HANDLE THE UPGRADE IN SERVICE PRIOR TO FINAL DESIGN APPROVAL AS THE ENCLOSURE AND/OR METER MAY REQUIRE REPLACEMENT.
(D) 5. REQUEST FOR SERVICE MUST BE OBTAINED VIA THE UTILITIES AND ENERGY SERVICES WEBSITE. REQUEST MUST BE COMPLETED AT LEAST 13-WEEKS PRIOR TO DESIRED INSTALLATION DATE. PLEASE VISIT http://www.energy.ucf.edu/forms-and-procedures .
(E) 6. CONDUCTORS SHALL CLEARLY INDICATE THEIR PHASE AT ALL JOINTS, PULL BOXES AND TERMINATIONS.
(F) 7. CONDUCTORS #10 AWG AND SMALLER SHALL UTILIZE COLOR CODED WIRE INSULATION.
(G) 8. CONDUCTORS LARGER THAN #10 AWG MAY USE PHASE TAPE FOR IDENTIFICATION. TAPE SHALL EXTEND A MINIMUM OF 3" AND BE LOCATED WITHIN 3" OF THE JOINT, PULLBOX OR TERMINATION.
(H) 9. CONDUCTOR IDENTIFICATION SHALL US THE FOLLOWING COLORS:
   9.1. 277/480: PHASE A - BROWN, PHASE B- ORANGE, PHASE C - YELLOW, NEUTRAL - GRAY, GROUNDING - GREEN W/ YELLOW STRIPE
   9.2. 120/208: PHASE A - BLACK, PHASE B- RED, PHASE C - BLUE, NEUTRAL - WHITE, GROUNDING - GREEN
   9.3. 120/240: LINE 1 - BLACK, LINE 2 - RED, NEUTRAL - WHITE, GROUNDING - GREEN
(I) 10. CLEANING CONDUCTORS: SURFACE CONTAMINATION, ESPECIALLY SURFACE OXIDE, MUST BE EXPECTED ON ALL CONDUCTORS. THESE SURFACE OXIDE FILMS ARE INSULATORS AND MUST BE BROKEN DOWN TO ACHIEVE THE METAL-TO-METAL CONTACT REQUIRED FOR EFFICIENT ELECTRICAL CONNECTIONS. IN ADDITION TO CLEANING, THE SURFACE SHOULD BE COVERED WITH A GOOD JOINT COMPOUND TO EXCLUDE MOISTURE, THUS PREVENTING THE OXIDE FROM REFORMING.
(J) 11. ALUMINUM CONDUCTORS: ALUMINUM OXIDE, IN PARTICULAR, FORMS VERY RAPIDLY; THEREFORE, ALUMINUM CONDUCTORS MUST BE THOROUGHLY CLEANED BY USE OF AN EMERY CLOTH IMMEDIATELY PRIOR TO MAKING THE CONNECTION, THE SURFACE SHOULD BE COVERED WITH A GOOD JOINT COMPOUND TO EXCLUDE MOISTURE, THUS PREVENTING THE OXIDE FROM REFORMING.
(K) 12. CONTRACTOR WILL INCLUDE GROUND TEST WITH A RECENTLY CALIBRATED SPECIALIZED TOOL FOR TESTING GROUNDING SYSTEMS. TEST SHALL BE WITNESSED BY UCF UES.
(L) 13. ALL ORIGINAL CALIBRATION CERTIFICATES OR TEST RESULTS SUPPLIED WITH ANY METER OR INSTRUMENT TRANSFORMER MUST BE TURNED OVER TO UCF UES.
(M) 14. ALL WIRE PENETRATIONS ENTERING A BUILDING MUST BE FIRE CAULKED.
(N) 15. FOR ALL PORTIONS OF INSTALLATIONS ABOVE GROUND, METALLIC CONDUIT SHALL BE USED.
(O) 16. ALL SERVICES SHALL HAVE A GROUNDED NEUTRAL.
(P) 17. SERVICES SHALL BE UNDERGROUND. OVERHEAD SERVICES ARE NOT PERMITTED.
(Q) 18. ALL SECONDARY CONDUCTORS LEAVING A PAD-MOUNTED TRANSFORMER SHALL BE PROVIDED WITH A WHITE PLASTIC ID TAG ATTACHED TO THE CONDUCTOR INDICATING THE BUILDING OR LOCATION IS SERVES.
(R) 19. ALL UTILITIES, VALVES, FITTINGS, PIPES WILL HAVE X, Y AND Z GPS COORDINATES TAKEN AND ATTACHED TO THE AS-BUILTS AS WELL AS PROVIDED IN ELECTRONIC FORMAT AS SPECIFIED BY THE UCF UES GIS MANAGER.
(S) 20. DIFFERENT UTILITIES SHALL NOT BE STACKED WITHIN THE SAME TRENCH.

VERIFICATION AREA - PLEASE COMPLETE AND SUBMIT TO UCF UES PRIOR TO ELECTRICAL INSPECTION

	Initials	Date		Initials	Date		Initials	Date		Initials	Date
(A)			(F)			(K)			(P)		
(B)			(G)			(L)			(Q)		
(C)			(H)			(M)			(R)		
(D)			(I)			(N)			(S)		
(E)			(J)			(O)			(T)	NA	NA

FIGURE 01: ELECTRIC SERVICE RESPONSIBILITY TABLE

Rev. 7/1/2019

COMPONENT	DESIGN BY (NOTE 1)	PROVIDED BY	INSTALLED BY	TERMINATED BY	VERIFIED BY
PRIMARY SIDE OF TRANSFORMER					
CONDUIT (NOTE 7)	SIZE/QTY - DUKE LOCATION - EOR, DUKE, UCF UES	CONTRACTOR	CONTRACTOR	--	UCF UES/DUKE
ENCASEMENT	DUKE + UCF UES	CONTRACTOR	CONTRACTOR	--	UCF UES
CONDUCTORS	DUKE	DUKE	DUKE	DUKE	DUKE
UTILITY TRANSFORMER					
TRANSFORMER	DUKE	DUKE	DUKE	--	DUKE
TRANSFORMER PAD - FIG 11A & B, 12 (NOTE 2)	PAD - DUKE LOCATION - EOR, DUKE, UCF UES	CONTRACTOR	CONTRACTOR	--	UCF UES/DUKE
SECONDARY SIDE OF TRANSFORMER					
CONDUIT	EOR	CONTRACTOR	CONTRACTOR	--	UCF UES
ENCASEMENT	EOR + UCF UES	CONTRACTOR	CONTRACTOR	--	UCF UES
CONDUCTORS	EOR	CONTRACTOR	CONTRACTOR (NOTE 3)	CONTRACTOR (NOTE 4)	DUKE + EOR
METER BASE	UCF UES	UCF UES	CONTRACTOR	--	UCF UES
METER	UCF UES	UCF UES	CONTRACTOR	--	UCF UES
HI-POT & MEGGER TESTING	EOR	CONTRACTOR	--	--	EOR, SUBMITTED TO UCF UES
CONDUCTORS PHASING / TESTING	EOR	CONTRACTOR	--	--	EOR, SUBMITTED TO UCF UES
GROUND POTENTIAL TESTING	EOR	CONTRACTOR + UCF F. & SAFETY	--	--	EOR, SUBMITTED TO UCF UES
ITEMS BELOW APPLICABLE TO CT RATED METER (3-Phase/4-Wire WYE, 120-480V) ONLY					
CURRENT TRANSFORMERS (CTs)	UCF UES OR DUKE (NOTE 5)	UCF UES OR DUKE (NOTE 5)	CONTRACTOR OR DUKE (NOTE 6)	--	UCF IF OUTSIDE XFMR; DUKE INSIDE XFMR
CONDUIT FROM CTs TO METER ENCLOSURE	UCF UES	CONTRACTOR	CONTRACTOR	--	UCF UES
CONDUCTORS FROM CT TO METER	UCF UES	CONTRACTOR OR DUKE (NOTE 6)	CONTRACTOR OR DUKE (NOTE 6)	CONTRACTOR OR DUKE (NOTE 6)	DUKE
CT CABINET (IF APPLICABLE)	UCF UES	CONTRACTOR	CONTRACTOR	CONTRACTOR	UCF UES

NOTES:
1. WHEN REQUIREMENTS ARE PROVIDED BY DUKE OR UCF, THEY SHALL BE CONSIDERED REQUESTS IN ADDITION TO CODE REQUIRED MINIMUMS. ENGINEER OF RECORD (EOR) SHALL REVIEW, CONFIRM APPLICABILITY OF REQUESTS AND INCORPORATE THESE ITEMS INTO THE PROJECT DOCUMENTS AS APPLICABLE.
2. DUKE REQUIREMENTS: www.duke-energy.com/PARTNER-WITH-US/BUILDERS-DEVELOPERS-AND-CONTRACTORS/CONSTRUCTION-TOOLBOX/
3. CONTRACTOR PULLS SECONDARY CONDUCTORS INTO DUKE PAD MOUNT TRANSFORMER. CONTRACTOR LEAVES SUFFICIENT SLACK FOR DUKE TO BOLT CONDUCTORS TO SECONDARY BUSHING LUGS.
4. CONTRACTOR MAKES TERMINATIONS ON SECONDARY CABLE AND DUKE BOLTS CONDUCTOR TO LUG ON SECONDARY BUSHING IN TRANSFORMER.
5. PRIMARY METHOD - CTs IN TRANSFORMER (DUKE PROVIDES CTs) | ALTERNATE METHOD - CTs OUTSIDE TRANSFORMER IN CT CABINET OR SWITCHGEAR (UCF UES PROVIDES CTs)
6. DUKE IF CTs INSIDE TRANSFORMER. CONTRACTOR ALL OTHERS.
7. DUKE ENERGY DESIGN REQUESTS FOR PULLBOXES, MANHOLES, ETC MUST BE ADHERED TO FULLY WITHOUT SUBSTITUTE AND SPEC SHEETS CAN BE REQUESTED FROM DUKE ENERGY THROUGH UCF UES.

FIGURE 02:
UNDERGROUND CONDUIT ENCASEMENT

Rev. 7/1/2019

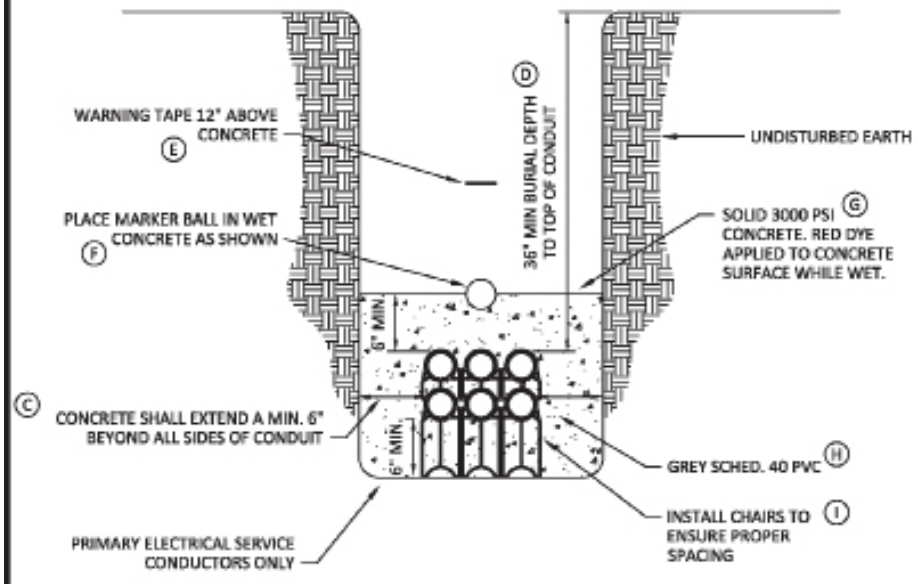

NOTES:
- (A) 1. ALL TRENCHING, CONDUIT LAYOUT, CONDUIT SIZING AND SEPARATION BETWEEN CABLES SHALL COMPLY WITH DUKE AND NEC REQUIREMENTS.
- (B) 2. CONDUIT ENCASEMENT APPLIES TO ALL PRIMARY ELECTRICAL FEEDERS.

VERIFICATION AREA - PLEASE COMPLETE AND SUBMIT TO UCF UES PRIOR TO ELECTRICAL INSPECTION

	Initials	Date		Initials	Date		Initials	Date		Initials	Date
A			E			I			M	NA	NA
B			F			J	NA	NA	N	NA	NA
C			G			K	NA	NA	O	NA	NA
D			H			L	NA	NA	P	NA	NA

FIGURE 03A:
POST-MOUNTED METER DETAIL W/ CTs IN XFMR

Rev. 7/1/2019

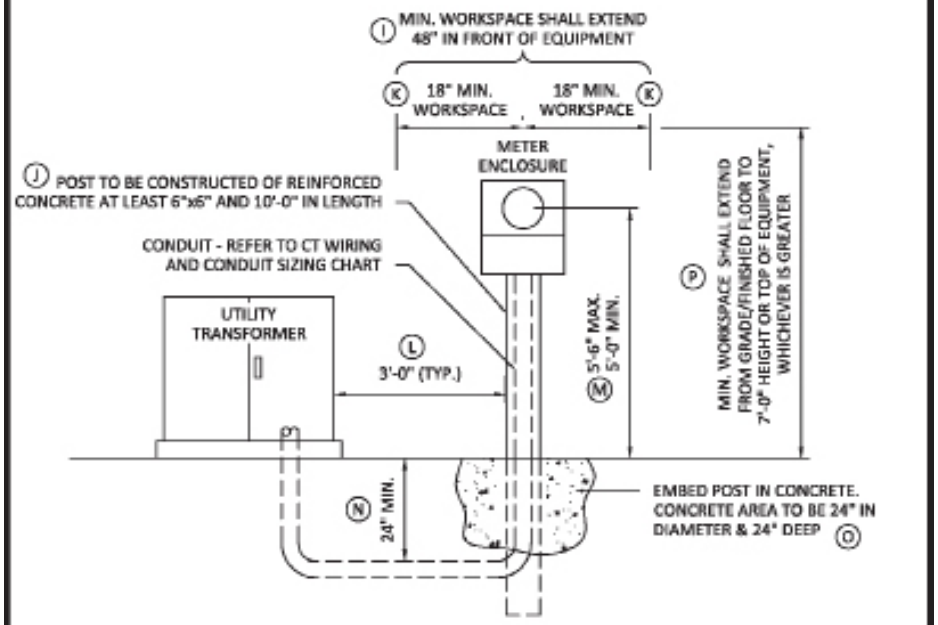

NOTES:
1. REFER TO RESPONSIBILITY TABLE FOR PARTY DESIGNING, PROVIDING, INSTALLING, TERMINATING AND VERIFYING COMPONENTS.
- (A) 2. METER ENCLOSURE SHALL BE BONDED AS REQUIRED BY THE N.E.C., AUTHORITY HAVING JURISDICTION AND UCF UES.
- (B) 3. THIS INSTALLATION MAY NOT BE USED IF TRANSFORMER PROVIDES SERVICE TO MORE THAN ONE BUILDING.
- (C) 4. METER PEDESTAL MUST BE RIGID ENOUGH TO WITHSTAND FORCES APPLIED WHEN METER IS INSTALLED OR REMOVED.
- (D) 5. DO NOT WIRE THROUGH THE BACK OF THE METER SOCKET.
- (E) 6. DO NOT ALTER METER ENCLOSURE, USE PROVIDED KNOCKOUTS ONLY.
- (F) 7. METER SOCKETS AND ENCLOSURES SHALL BE SECURELY MOUNTED IN A PLUMB AND LEVEL POSITION. THE MOUNTING METHOD SHALL FOLLOW THE MANUFACTURERS RECOMMENDATIONS AND WITHSTAND THE NORMAL FORCES REQUIRED TO ROUTINELY REMOVE AND INSTALL THE METER.
- (G) 8. NAILS OF ANY KIND OR PLASTIC ANCHORS ARE NOT PERMITTED FOR MOUNTING EQUIPMENT.
- (H) 9. APPROVED FASTENERS FOR MOUNTING EQUIPMENT: TAP CONS, LEAD ANCHORS, TOGGLE BOLTS

VERIFICATION AREA - PLEASE COMPLETE AND SUBMIT TO UCF UES PRIOR TO ELECTRICAL INSPECTION

	Initials	Date		Initials	Date		Initials	Date		Initials	Date
A			E			I			M		
B			F			J			N		
C			G			K			O		
D			H			L			P		

FIGURE 03B:
Rev. 10/30/2017

BUILDING-MOUNTED METER, SELF-CONTAINED METER OR REMOTE METER W/ CTs IN BUILDING

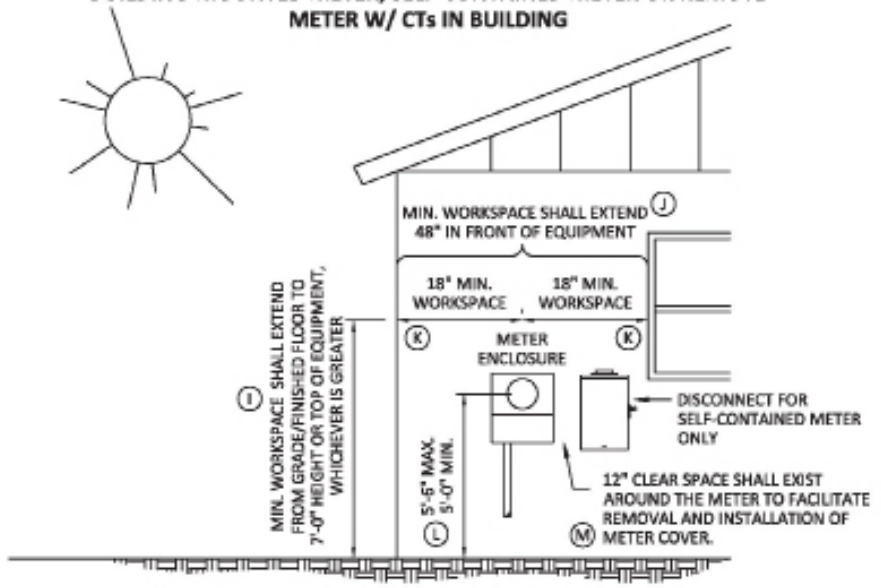

NOTES:

1. REFER TO RESPONSIBILITY TABLE FOR PARTY DESIGNING, PROVIDING, INSTALLING, TERMINATING AND VERIFYING COMPONENTS.
(A) 2. METER ENCLOSURE SHALL BE BONDED AS REQUIRED BY THE N.E.C., AUTHORITY HAVING JURISDICTION AND UCF UES.
(B) 3. DO NOT WIRE THROUGH THE BACK OF THE METER SOCKET.
(C) 4. DO NOT ALTER METER ENCLOSURE, USE PROVIDED KNOCKOUTS ONLY.
(D) 5. METER SOCKETS AND ENCLOSURES SHALL BE SECURELY MOUNTED IN A PLUMB AND LEVEL POSITION. THE MOUNTING METHOD SHALL FOLLOW THE MANUFACTURERS RECOMMENDATIONS AND WITHSTAND THE NORMAL FORCES REQUIRED TO ROUTINELY REMOVE AND INSTALL THE METER.
(E) 6. METER ENCLOSURES SHALL NOT BE RECESSED OR FRAMED IN ANY WAY THAT BLOCKS ACCESS, KNOCKOUTS OR DRAINAGE.
(F) 7. METER SHALL BE PROTECTED FROM MECHANICAL DAMAGE AND SHALL NOT BE SUBJECT TO ANY CONDITIONS THAT WILL INCREASE MAINTENANCE, REPAIRS OR REPLACEMENT. THIS INCLUDES ITEMS SUCH AS DISCHARGE FROM KITCHEN FANS OR VENTS, RAIN RUNOFF, AIR CONDITIONER CONDENSATE OR ANY FORM OF VIBRATION.
(G) 8. NAILS OF ANY KIND OR PLASTIC ANCHORS ARE NOT PERMITTED FOR MOUNTING EQUIPMENT.
(H) 9. APPROVED FASTENERS FOR MOUNTING EQUIPMENT: TAP CONS, LEAD ANCHORS, TOGGLE BOLTS.

VERIFICATION AREA - PLEASE COMPLETE AND SUBMIT TO UCF UES PRIOR TO ELECTRICAL INSPECTION

	Initials	Date		Initials	Date		Initials	Date		Initials	Date
(A)			(E)			(I)			(M)		
(B)			(F)			(J)			(N)	NA	NA
(C)			(G)			(K)			(O)	NA	NA
(D)			(H)			(L)			(P)	NA	NA

FIGURE 03C:
Rev. 11/17/2017

BUILDING-MOUNTED METER W/ CT CABINET

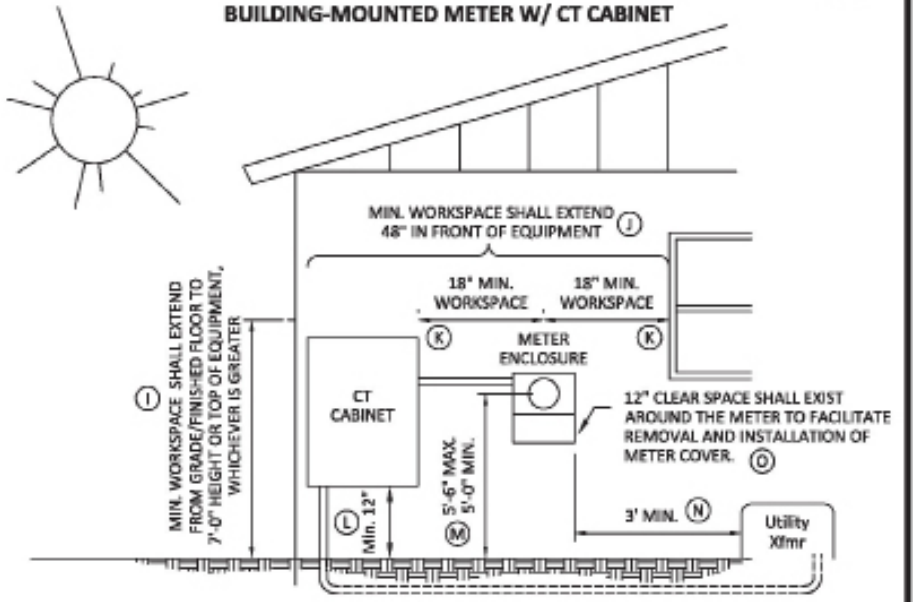

NOTES:

1. REFER TO RESPONSIBILITY TABLE FOR PARTY DESIGNING, PROVIDING, INSTALLING, TERMINATING AND VERIFYING COMPONENTS.
(A) 2. METER ENCLOSURE AND METER CABINET SHALL BE BONDED AS REQUIRED BY THE N.E.C., AUTHORITY HAVING JURISDICTION AND UCF UES.
(B) 3. DO NOT WIRE THROUGH THE BACK OF THE METER SOCKET.
(C) 4. DO NOT ALTER METER ENCLOSURE, USE PROVIDED KNOCKOUTS ONLY.
(D) 5. METER SOCKETS AND ENCLOSURES SHALL BE SECURELY MOUNTED IN A PLUMB AND LEVEL POSITION. THE MOUNTING METHOD SHALL FOLLOW THE MANUFACTURERS RECOMMENDATIONS AND WITHSTAND THE NORMAL FORCES REQUIRED TO ROUTINELY REMOVE AND INSTALL THE METER.
(E) 6. METER ENCLOSURES SHALL NOT BE RECESSED OR FRAMED IN ANY WAY THAT BLOCKS ACCESS, KNOCKOUTS OR DRAINAGE.
(F) 7. METER SHALL BE PROTECTED FROM MECHANICAL DAMAGE AND SHALL NOT BE SUBJECT TO ANY CONDITIONS THAT WILL INCREASE MAINTENANCE, REPAIRS OR REPLACEMENT. THIS INCLUDES ITEMS SUCH AS DISCHARGE FROM KITCHEN FANS OR VENTS, RAIN RUNOFF, AIR CONDITIONER CONDENSATE OR ANY FORM OF VIBRATION.
(G) 8. NAILS OF ANY KIND OR PLASTIC ANCHORS ARE NOT PERMITTED FOR MOUNTING EQUIPMENT.
(H) 9. APPROVED FASTENERS FOR MOUNTING EQUIPMENT: TAP CONS, LEAD ANCHORS, TOGGLE BOLTS.

VERIFICATION AREA - PLEASE COMPLETE AND SUBMIT TO UCF UES PRIOR TO ELECTRICAL INSPECTION

	Initials	Date		Initials	Date		Initials	Date		Initials	Date
(A)			(E)			(I)			(M)		
(B)			(F)			(J)			(N)		
(C)			(G)			(K)			(O)		
(D)			(H)			(L)			(P)	NA	NA

FIGURE 04A: METER BASE FORM 1S WIRING DIAGRAM

Rev. 10/30/2017

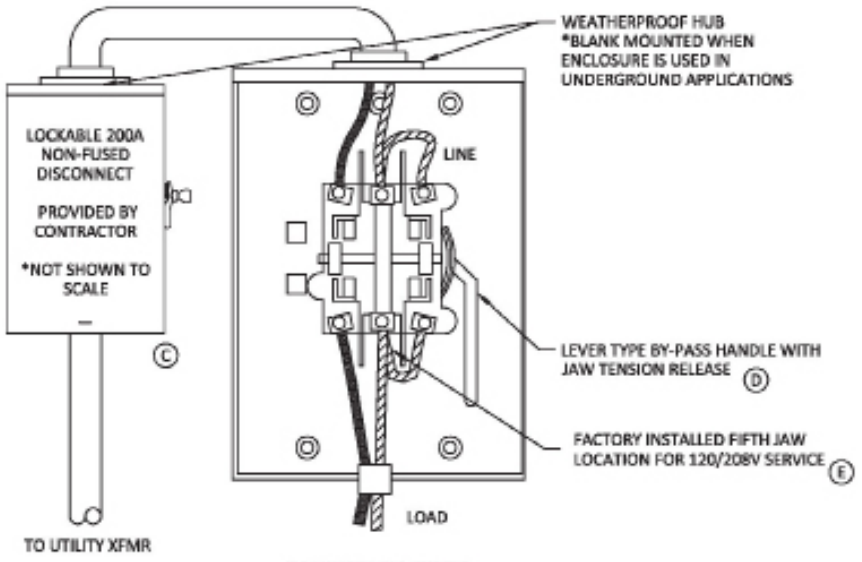

NOTES:

1. REFER TO RESPONSIBILITY TABLE FOR PARTY DESIGNING, PROVIDING, INSTALLING, TERMINATING AND VERIFYING COMPONENTS.
2. NOT SUITABLE FOR USE WITH ANY VOLTAGE ABOVE 240V.
3. (A) MINIMUM WIRE SIZE #6.
4. (B) ELECTRICAL SERVICE CONDUCTORS SHALL HAVE PHASE TAPE APPLIED AT ALL TERMINATIONS. TAPE SHALL EXTEND A MINIMUM OF 4" ALONG ALL CONDUCTORS.

SOCKET FORM 1S	METER ENCLOSURE / BASE						
AMP RATING	MANUF.	MODEL	MATERIAL	COVER	COLOR	VOLTAGE RATING	TEST SWITCH / BYPASS
(F) 200	MILBANK	U3505-XL-TG-HSP	STEEL	RINGLESS	ANSI 61 GRAY	600 VAC	BYPASS LEVER

VERIFICATION AREA - PLEASE COMPLETE AND SUBMIT TO UCF UES PRIOR TO ELECTRICAL INSPECTION

Initials	Date	Initials	Date	Initials	Date	Initials	Date
(A)		(C)		(E)		(G) NA	NA
(B)		(D)		(F)		(H) NA	NA

FIGURE 04B: METER BASE FORM 2S WIRING DIAGRAM

Rev. 10/30/2017

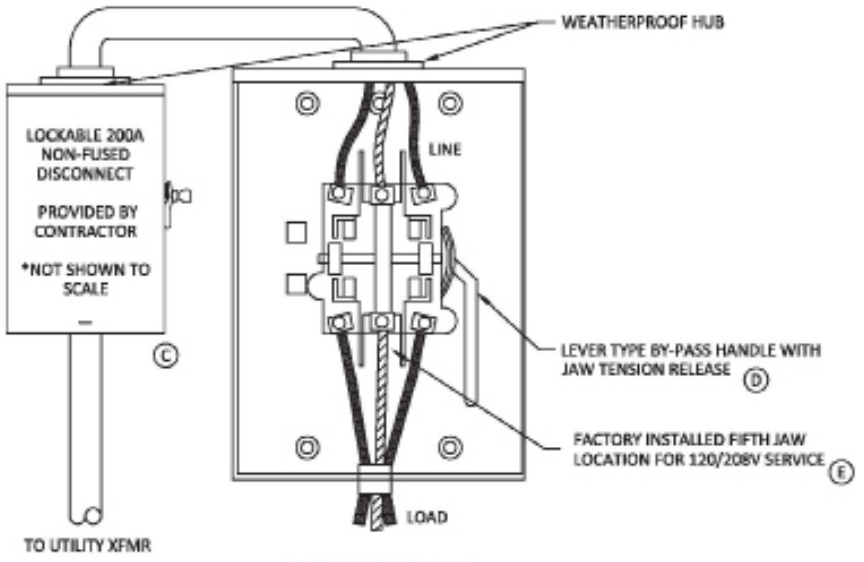

NOTES:

1. REFER TO RESPONSIBILITY TABLE FOR PARTY DESIGNING, PROVIDING, INSTALLING, TERMINATING AND VERIFYING COMPONENTS.
2. NOT SUITABLE FOR USE WITH ANY VOLTAGE ABOVE 240V.
3. (A) MINIMUM WIRE SIZE #6.
4. (B) ELECTRICAL SERVICE CONDUCTORS SHALL HAVE PHASE TAPE APPLIED AT ALL TERMINATIONS. TAPE SHALL EXTEND A MINIMUM OF 4" ALONG ALL CONDUCTORS.

SOCKET FORM 2S	METER ENCLOSURE / BASE						
AMP RATING	MANUF.	MODEL	MATERIAL	COVER	COLOR	VOLTAGE RATING	TEST SWITCH / BYPASS
(F) 200	MILBANK	U9801-X-QG-HSP	STEEL	RINGLESS	ANSI 61 GRAY	600 VAC	BYPASS LEVER
(G) 200	MILBANK	U2124-O-HSP	STEEL	RINGLESS	ANSI 61 GRAY	600 VAC	BYPASS LEVER

VERIFICATION AREA - PLEASE COMPLETE AND SUBMIT TO UCF UES PRIOR TO ELECTRICAL INSPECTION

Initials	Date	Initials	Date	Initials	Date	Initials	Date
(A)		(C)		(E)		(G)	
(B)		(D)		(F)		(H) NA	NA

FIGURE 04C:
METER BASE FORM 9S WIRING DIAGRAM

Rev. 10/30/2017

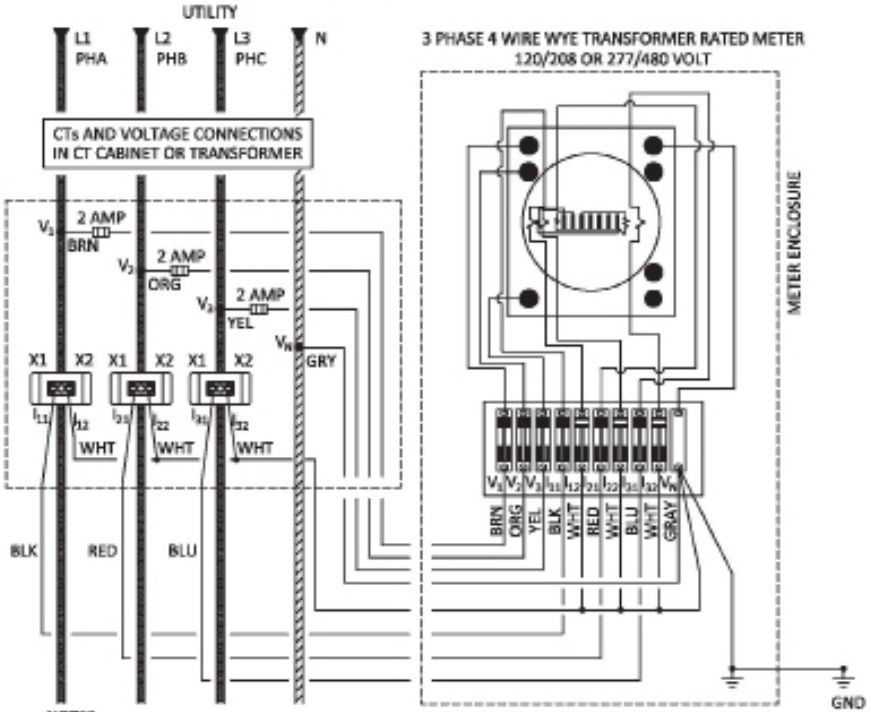

NOTES:

1. REFER TO RESPONSIBILITY TABLE FOR PARTY DESIGNING, PROVIDING, INSTALLING, TERMINATING AND VERIFYING COMPONENTS.
2. (A) ADD METER POWER FUSING INSIDE METER CAN. 600 VOLT RATED W/ 2A FUSE.
3. (B) COLOR OF INSTRUMENT WIRING INSULATION SHALL FOLLOW THIS DETAIL. PHASE TAPE AT WIRING TERMINATIONS IS NOT SUFFICIENT.
4. (C) ELECTRICAL SERVICE CONDUCTORS SHALL HAVE PHASE TAPE APPLIED AT ALL TERMINATIONS. TAPE SHALL EXTEND A MINIMUM OF 4" ALONG ALL CONDUCTORS.

SOCKET FORM 9S	METER ENCLOSURE / BASE						
AMP RATING	MANUF.	MODEL	MATERIAL	COVER	COLOR	VOLTAGE RATING	TEST SWITCH / BYPASS
(D) 20	COOPER	FW02133N2GR1F	STEEL	RING W/ 2 PC COVER	ANSI 61 GRAY	600 VAC	PRE-WIRED TEST SWITCH

VERIFICATION AREA - PLEASE COMPLETE AND SUBMIT TO UCF UES PRIOR TO ELECTRICAL INSPECTION

Initials	Date	Initials	Date	Initials	Date	Initials	Date
(A)		(C)		(E) NA	NA	(G) NA	NA
(B)		(D)		(F) NA	NA	(H) NA	NA

FIGURE 04D:
METER BASE FORM 16S WIRING DIAGRAM

Rev. 10/30/2017

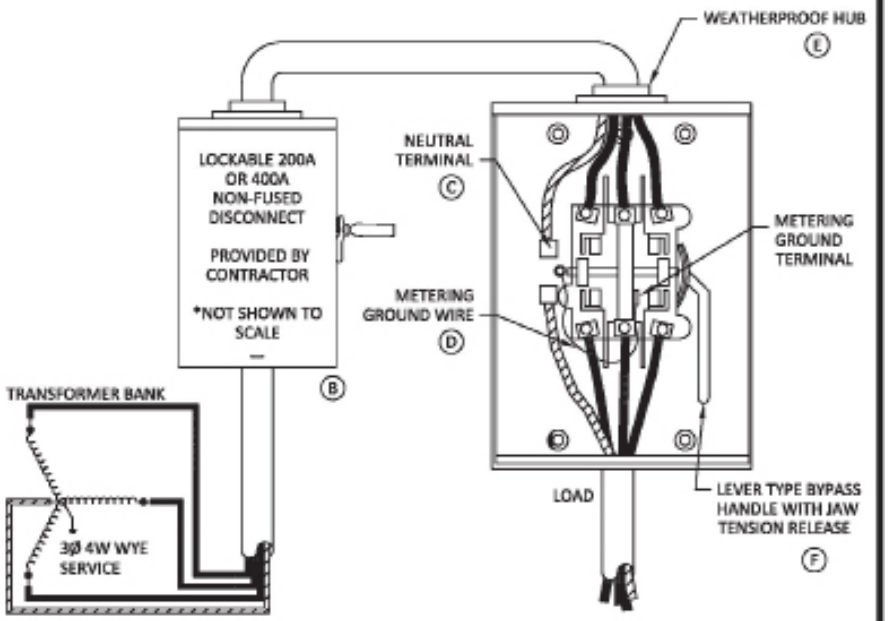

NOTES:

1. REFER TO RESPONSIBILITY TABLE FOR PARTY DESIGNING, PROVIDING, INSTALLING, TERMINATING AND VERIFYING COMPONENTS.
2. (A) MINIMUM WIRE SIZE #6.
3. (B) ELECTRICAL SERVICE CONDUCTORS SHALL HAVE PHASE TAPE APPLIED AT ALL TERMINATIONS. TAPE SHALL EXTEND A MINIMUM OF 4" ALONG ALL CONDUCTORS.

SOCKET FORM 16S	METER ENCLOSURE / BASE						
AMP RATING	MANUF.	MODEL	MATERIAL	COVER	COLOR	VOLTAGE RATING	TEST SWITCH / BYPASS
(G) 200	MILBANK	U9701-X-QG-HSP	STEEL	RINGLESS	ANSI 61 GRAY	600 VAC	BYPASS LEVER
(H) 320	MILBANK	U3566-X-HSP	STEEL	RINGLESS	ANSI 61 GRAY	600 VAC	BYPASS LEVER

VERIFICATION AREA - PLEASE COMPLETE AND SUBMIT TO UCF UES PRIOR TO ELECTRICAL INSPECTION

Initials	Date	Initials	Date	Initials	Date	Initials	Date
(A)		(C)		(E)		(G) NA	NA
(B)		(D)		(F)		(H) NA	NA

FIGURE 05: Rev. 10/30/2017

SELF-CONTAINED METER BASE LINE & LOAD WIRING CONFIGURATIONS (FORM 1S, 2S, 16S)

ACCEPTABLE CONFIGURATION

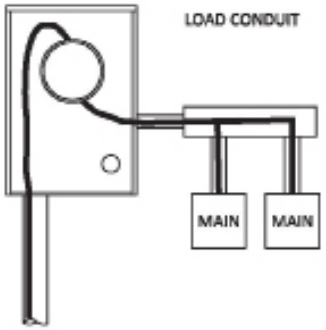

ACCEPTABLE CONFIGURATION

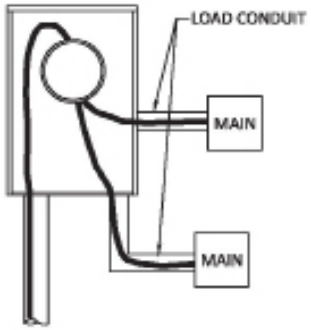

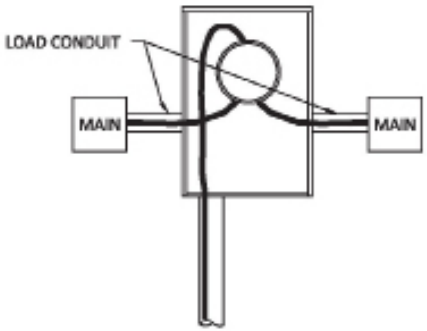

UNACCEPTABLE CONFIGURATION

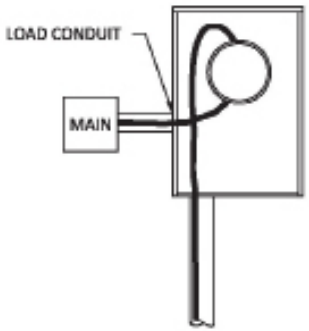

UNACCEPTABLE CONFIGURATION

NOTES:
1. REFER TO RESPONSIBILITY TABLE FOR PARTY DESIGNING, PROVIDING, INSTALLING, TERMINATING AND VERIFYING COMPONENTS.
(A) 2. THE LOWER LEFT PORTION OF THE METER ENCLOSURE IS RESERVED FOR LINE SIDE CONDUCTORS ON UNDERGROUND SERVICE.
(B) 3. METER WIRING REFLECTS ONE OF THE ACCEPTABLE CONFIGURATIONS.

VERIFICATION AREA - PLEASE COMPLETE AND SUBMIT TO UCF UES PRIOR TO ELECTRICAL INSPECTION

	Initials	Date		Initials	Date		Initials	Date		Initials	Date
(A)			(C)	NA	NA	(E)	NA	NA	(G)	NA	NA
(B)			(D)	NA	NA	(F)	NA	NA	(H)	NA	NA

FIGURE 06: Rev. 10/30/2017

CT WIRING AND CONDUIT SIZING TABLE

B0.1 RATED CURRENT TRANSFORMER			
ONE WAY WIRE DISTANCE FROM METER TO CT	WIRE SIZE	MINIMUM CONDUIT SIZE ABOVEGROUND	MINIMUM CONDUIT SIZE UNDERGROUND
1 - 20 FEET	#12 AWG	1"	1-1/2"
>20 - 32 FEET	#10 AWG	1"	1-1/2"
>32 - 51 FEET	#8 AWG	1-1/4"	1-1/2"

B0.2 RATED CURRENT TRANSFORMER			
ONE WAY WIRE DISTANCE FROM METER TO CT	WIRE SIZE	MINIMUM CONDUIT SIZE ABOVEGROUND	MINIMUM CONDUIT SIZE UNDERGROUND
1 - 45 FEET	#12 AWG	1"	1-1/2"
>45 - 73 FEET	#10 AWG	1"	1-1/2"
>74 - 116 FEET	#8 AWG	1-1/4"	1-1/2"

B0.5 RATED CURRENT TRANSFORMER			
ONE WAY WIRE DISTANCE FROM METER TO CT	WIRE SIZE	MINIMUM CONDUIT SIZE ABOVEGROUND	MINIMUM CONDUIT SIZE UNDERGROUND
1 - 100 FEET	#12 AWG	1"	1-1/2"
>100 - 195 FEET	#10 AWG	1"	1-1/2"
>195 - 300 FEET	#8 AWG	1-1/4"	1-1/2"

NOTES:
1. REFER TO RESPONSIBILITY TABLE FOR PARTY DESIGNING, PROVIDING, INSTALLING, TERMINATING AND VERIFYING COMPONENTS.
2. ABOVE VALUES BASED ON 0.02 OHM BURDEN FOR METER. VERIFY METER BURDEN OF ACTUAL METER IS 0.02 OHMS OR LESS.
(A) 3. CT WIRING AND CONDUIT CONFIGURATION COMPLIES WITH ONE OF THE SCENARIOS LISTED ABOVE AND THE INSTALLED CONFIGURATION HAS BEEN IDENTIFIED ON THIS SHEET.

VERIFICATION AREA - PLEASE COMPLETE AND SUBMIT TO UCF UES PRIOR TO ELECTRICAL INSPECTION

	Initials	Date		Initials	Date		Initials	Date		Initials	Date
(A)			(C)	NA	NA	(E)	NA	NA	(G)	NA	NA
(B)	NA	NA	(D)	NA	NA	(F)	NA	NA	(H)	NA	NA

FIGURE 07:
CT CABINET SIZING CHART

Rev. 10/15/2016

CABINET SIZE H x W x D	CONDUIT SIZE	MAXIMUM NO. OF CONDUITS	CONDUCTOR SIZE	MAXIMUM NUMBER OF CONDUCTORS
46" X 30" X 14.5"	4" OR SMALLER	6 IN 6 OUT	500 KCM OR SMALLER	24 OUT 24 IN
	4" OR SMALLER	5 IN 5 OUT	750 KCM OR SMALLER	20 OUT 20 IN
34" X 32" X 12"	4" OR SMALLER	6 IN 6 OUT	500 KCM OR SMALLER	24 OUT 24 IN
	4" OR SMALLER	5 IN 5 OUT	750 KCM OR SMALLER	20 OUT 20 IN
	4" OR SMALLER	6 IN 6 OUT	500 KCM OR SMALLER	24 OUT 24 IN
	4" OR SMALLER	5 IN 5 OUT	750 KCM OR SMALLER	20 OUT 20 IN

NOTES:
1. REFER TO RESPONSIBILITY MATRIX FOR PARTY DESIGNING, PROVIDING, INSTALLING, TERMINATING AND VERIFYING COMPONENTS.
2. WHEN USING ONE OR MORE SETS OF 750 KCM CONDUCTOR, THE 750 KCM SPECIFICATIONS WILL BE FOLLOWED: NO EXCEPTIONS!
(A) 3. CT CABINET CONFIGURATION SHALL COMPLY WITH ONE OF THE SCENARIOS LISTED ABOVE. CONFIRM THIS HAS BEEN COMPLETED AND IDENTIFIED ON THIS SHEET.

VERIFICATION AREA - PLEASE COMPLETE AND SUBMIT TO UCF UES PRIOR TO ELECTRICAL INSPECTION

	Initials	Date		Initials	Date		Initials	Date		Initials	Date
(A)			(C)	NA	NA	(E)	NA	NA	(G)	NA	NA
(B)	NA	NA	(D)	NA	NA	(F)	NA	NA	(H)	NA	NA

FIGURE 08:
CT CABINET WIRING AND MOUNTING DIAGRAM

Rev. 10/30/2017

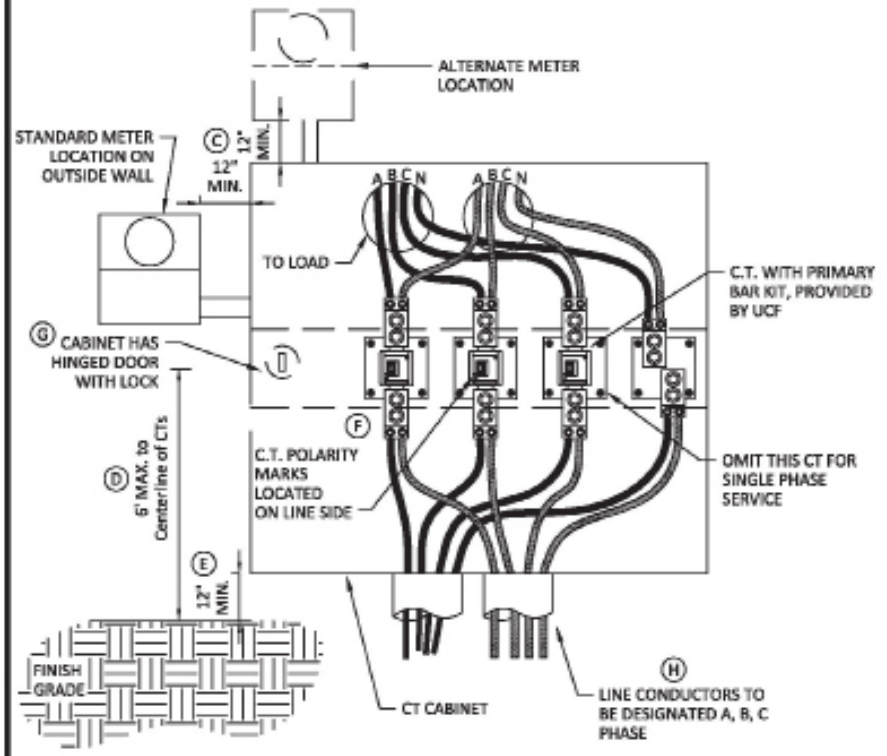

NOTES:
1. REFER TO RESPONSIBILITY TABLE FOR PARTY DESIGNING, PROVIDING, INSTALLING, TERMINATING AND VERIFYING COMPONENTS.
2. REFER TO CT CABINET SIZING FIGURE FOR CONDUIT, CONDUCTOR AND CT CABINET SIZING REQUIREMENTS.
(A) 3. METER ENCLOSURE AND ASSOCIATED METER CABINETS SHALL BE BONDED TO GROUND AS REQUIRED BY THE N.E.C., AUTHORITY HAVING JURISDICTION AND UCF UES.
(B) 4. UCF OWNED CURRENT TRANSFORMERS MUST BE INSTALLED AND ISOLATED IN PLACE USING THE MANUFACTURERS MOUNTING KIT. CT'S MUST HAVE A PRIMARY BAR OR PRIMARY BUS BAR KIT INSERTED AND CONNECTED TO INCOMING AND OUTGOING CONDUCTORS FASTENED WITH LUGS/BOLTED CONNECTION. THIS ALLOWS FOR FUTURE REPLACEMENTS OF CURRENT TRANSFORMERS WITHOUT THE NEED TO ALTER CONDUCTORS. A PRIMARY DISCONNECT MUST FOLLOW THE CT CABINET BEFORE ENTERING MAIN ELECTRICAL ROOM.

VERIFICATION AREA - PLEASE COMPLETE AND SUBMIT TO UCF UES PRIOR TO ELECTRICAL INSPECTION

	Initials	Date		Initials	Date		Initials	Date		Initials	Date
(A)			(C)			(E)			(G)		
(B)			(D)			(F)			(H)		

FIGURE 09:
CURRENT TRANSFORMER (CT) REQUIREMENTS

Rev. 10/30/2017

NOTES:

1. REFER TO RESPONSIBILITY TABLE FOR PARTY DESIGNING, PROVIDING, INSTALLING, TERMINATING AND VERIFYING COMPONENTS.
2. CURRENT TRANSFORMER INSTALLATIONS SHALL STRIVE TO PROVIDE MAXIMUM ACCURACY. CURRENT TRANSFORMERS SHALL BE GENERAL ELECTRIC REVENUESENSE SPECIAL HIGH ACCURACY 0.15S CTS WITH A PRIMARY SELECTED TO MATCH THE MAINS RATING OF SERVICE AND A 5 AMP SECONDARY. CTS SHALL COMPLY WITH THE TABLE BELOW:

CURRENT RATIO (AMPS) PRI:SEC	MINIMUM BURDEN FOR ANSI ACCURACY CLASS 0.3 AT 60 HZ
100:5	B0.1
150:5	B0.1
200:5	B0.2
250:5	B0.5
300:5	B0.5
350:5	B0.5
400:5	B0.5
450:5	B0.5
500:5	B0.5
600:5	B0.5
800:5	B0.5
1000:5	B1.8
1200:5	B1.8
1500:5	B1.8
2000:5	B1.8
3000:5	B1.8

3. ALL CURRENT TRANSFORMERS ARE TO BE SIZED WHEN THE METER IS ORDERED.
4. ALL CURRENT TRANSFORMERS SECONDARY CURRENT MUST YIELD AT LEAST 5A AND BY SIZING CALCULATIONS YIELD NO MORE THAN 20A DUE TO METER CAPACITY.
5. ALL CURRENT TRANSFORMERS MUST BE SOLID CORE, REVENUE GRADE, ANSI RATED QUALITY.
6. SPLIT CORE CURRENT TRANSFORMERS ARE NOT-ACCEPTABLE.
7. CURRENT TRANSFORMER SIZING IS DEPENDENT UPON THE MAIN SERVICE RATING/SIZE METERED.
8. (A) ANY DEVIATIONS DUE SPECIFICALLY TO FIT AND OR APPLICATION RESTRICTIONS MUST BE APPROVED BY UTILITIES & ENERGY SERVICES PRIOR TO FINAL DESIGN.
9. (B) ALL CURRENT TRANSFORMERS MUST BE CENTERED ON CONDUCTORS, CENTERED ON BUS BAR USING DEPTH GUIDES FOR PROPER POSITIONING, TIES/RATED FILLER, OR BOLTED TO BUS BAR FOR INCREASED ACCURACY.
10. ALL CURRENT TRANSFORMERS MUST INCLUDE A SHORTING DEVICE/SWITCH ON THE TRANSFORMER.
11. ALL CURRENT TRANSFORMERS MUST BE UL LISTED AND APPROVED.

VERIFICATION AREA - PLEASE COMPLETE AND SUBMIT TO UCF UES PRIOR TO ELECTRICAL INSPECTION

	Initials	Date		Initials	Date		Initials	Date		Initials	Date
(A)			(C)	NA	NA	(E)	NA	NA	(G)	NA	NA
(B)			(D)	NA	NA	(F)	NA	NA	(H)	NA	NA

FIGURE 10:
METERING EQUIPMENT LABELING REQUIREMENTS

Rev. 10/30/2017

NOTES:

1. REFER TO RESPONSIBILITY TABLE FOR PARTY DESIGNING, PROVIDING, INSTALLING, TERMINATING AND VERIFYING COMPONENTS.
2. (A) ALL METER AND CT CABINETS/ENCLOSURES MUST BE CLEARLY AND PERMANENTLY MARKED WITH ELEMENT RESISTANT SIGNAGE. EITHER NONFERROUS STAINLESS STEEL OR PLASTIC PLATES, RIVETED TO METER BASE CAN BE USED WITH ENGRAVED LETTERING.
3. DO NOT USE PERMANENT MARKERS, PAINT, OR ANY OTHER MARKING PENS TO LABEL METER OR CT ENCLOSURES.
4. TEMPORARY MARKINGS FOR IDENTIFICATION CAN BE MADE ON THE INTERIOR OF THE ENCLOSURE UNTIL PERMANENT LABELING IS INSTALLED.

GENERAL LABEL SPECIFICATIONS

5. (B) LABEL DIMENSIONS (METER AND CT ENCLOSURE): 8"W X 4.5"H (MINIMUM)
6. (C) LABEL THICKNESS: 1/16" (MINIMUM)
7. (D) CASE COLOR: BLACK
8. (E) FONT STYLE: CALIBRI
9. (F) FONT SIZE (INCHES): 1/2" (MINIMUM)
10. (G) LETTERING COLOR: WHITE

LABEL CONTENT BY SERVICE/EQUIPMENT:

11. (H) CONTENT LINE 1: SERVICE: PHASE, WIRE, VOLTAGE, CURRENT
12. (I) CONTENT LINE 2: UTILITY COMPANY XFMR & PANEL FED FROM
13. (J) CONTENT LINE 3: BUILDING NUMBER OR SITE (UCF TO DEFINE)
14. (K) CONTENT LINE 4: "PROPERTY OF PROPERTY OF UTILITIES & ENERGY SERVICES"
15. (L) CONTENT LINE 5: "CONTACT (407)823-5223 FOR ASSISTANCE"



VERIFICATION AREA - PLEASE COMPLETE AND SUBMIT TO UCF UES PRIOR TO ELECTRICAL INSPECTION

	Initials	Date		Initials	Date		Initials	Date		Initials	Date
(A)			(E)			(I)			(M)	NA	NA
(B)			(F)			(J)			(N)	NA	NA
(C)			(G)			(K)			(O)	NA	NA
(D)			(H)			(L)			(P)	NA	NA

FIGURE 11A:
25 TO 300 KVA, 3 PHASE PADMOUNTED TRANSFORMERS

Rev. 7/10/2019

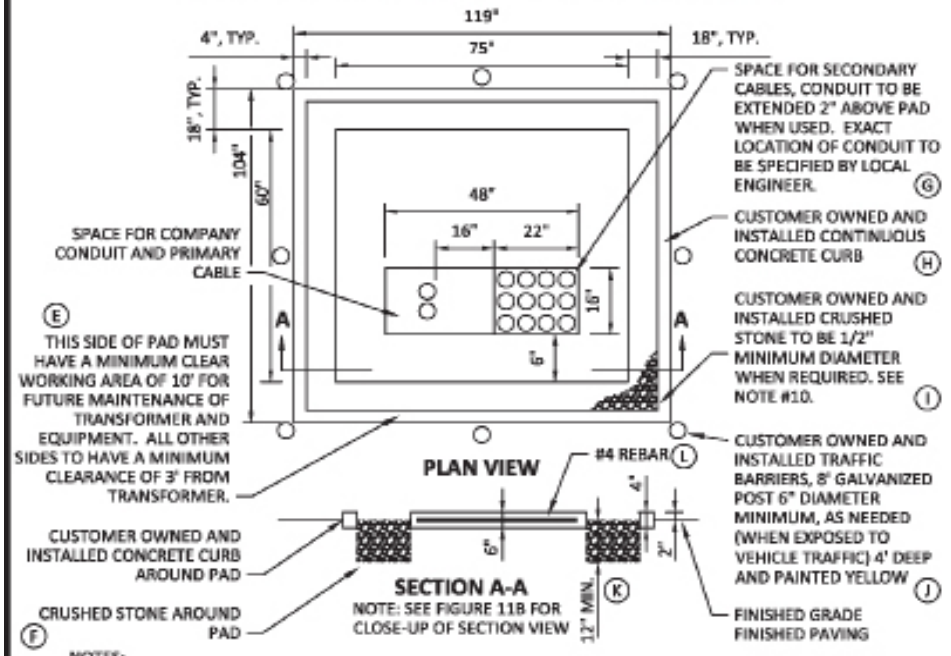

NOTES:

A B
1. THE GROUND SHALL BE LEVELED AND THOROUGHLY COMPACTED BEFORE THE PAD IS INSTALLED.
2. THERE SHALL BE NO ABOVE GROUND OBSTRUCTIONS WITHIN 10 FEET OF THE FRONT OF THE TRANSFORMER OR WITHIN 3' OF THE SIDES AND BACK. IF METERING TROUGH IS LOCATED BEHIND TRANSFORMER, MINIMUM CLEARANCE BETWEEN BACK OF TRANSFORMER AND CLOSEST PART OF TROUGH IS 6 FEET.
3. THE PAD IS SHOWN AS A REFERENCE AND IS INSTALLED AFTER CABLE AND CONDUIT IS INSTALLED.

C
4. CUT ALL CONDUITS OFF FLUSH WITH TOP OF PAD AND CAP CONDUIT.
5. SOD MAY BE REQUIRED AROUND PAD TO PREVENT SAND EROSION.
6. SIDE VENTILATION SHALL BE PROVIDED IF THERE IS A WALL CONSTRUCTED AROUND THE TRANSFORMER.
7. IF THE CUSTOMER PLANS TO RUN A NUMBER OF CONDUCTORS BEYOND THE MAXIMUM ALLOWED, A JUNCTION BOX MAY BE REQUIRED FOR TERMINATION OF THE CUSTOMER'S CONDUCTORS.

D
8. LARGER SECONDARY CABLE SHALL BE TO THE REAR OF THE PAD WITH SPARE CONDUIT TO THE FRONT.
9. CONTACT A COMPANY ENGINEERING REPRESENTATIVE FOR DETERMINATION OF NEED FOR CRUSHED STONE, CURBING AND TRAFFIC BARRIERS. EXACT ORIENTATION OF THE TRANSFORMER IN THE FIELD MUST BE APPROVED BY A COMPANY ENGINEERING REPRESENTATIVE.
10. IN AREAS WHERE TRANSFORMERS ARE TO BE ELEVATED ABOVE NORMAL GRADE, ENGINEERING DEPARTMENT MUST BE CONTACTED TO FOR APPROVAL OF DESIGN.

VERIFICATION AREA - PLEASE COMPLETE AND SUBMIT TO UCF UES PRIOR TO ELECTRICAL INSPECTION

	Initials	Date		Initials	Date		Initials	Date		Initials	Date
A			D			G			J		
B			E			H			K		
C			F			I			L		

FIGURE 11B:
SECTION VIEW OF CAST-IN-PLACE TRANSFORMER PAD

Rev. 7/1/2019

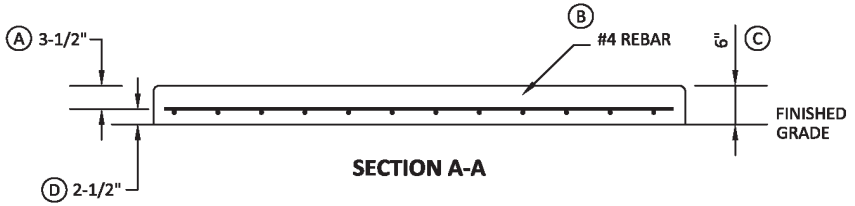

SECTION A-A

NOTES:
1. PLACEHOLDER FOR FUTURE NOTES.

VERIFICATION AREA - PLEASE COMPLETE AND SUBMIT TO UCF UES PRIOR TO ELECTRICAL INSPECTION

	Initials	Date		Initials	Date		Initials	Date		Initials	Date
A			D			G	NA	NA	J	NA	NA
B			E	NA	NA	H	NA	NA	K	NA	NA
C			F	NA	NA	I	NA	NA	L	NA	NA

FIGURE 12:
500 TO 3000 KVA, 3 PHASE PADMOUNTED TRANSFORMERS

Rev. 7/1/2019

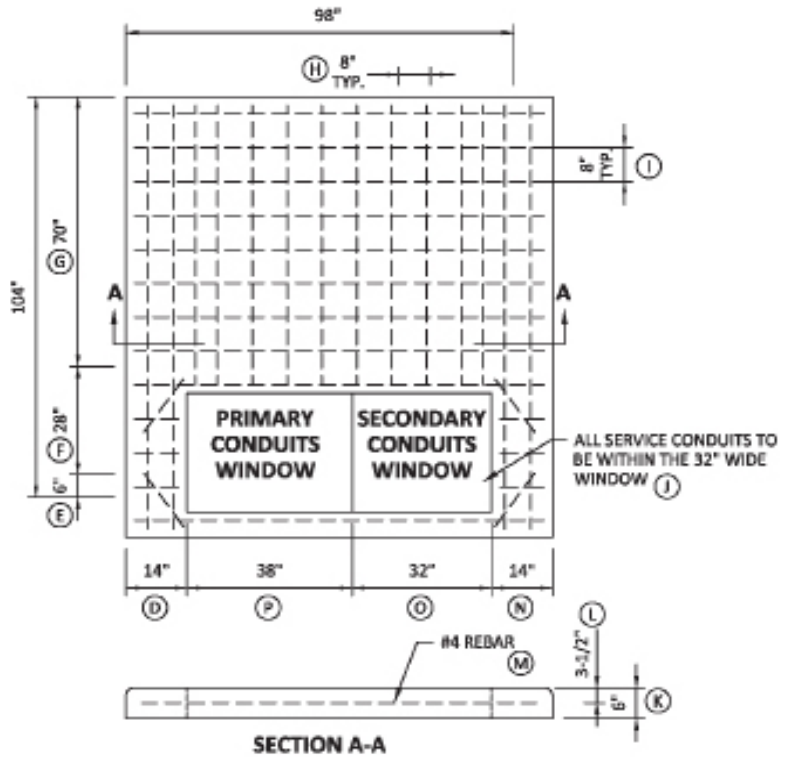

SECTION A-A

NOTES:

(A) 1. THE GROUND SHALL BE LEVELED AND THOROUGHLY COMPACTED BEFORE PAD IS INSTALLED.
(B) 2. USE FIRE ANT CONTROL UNDER ENTIRE PAD INCLUDING PAD OPENINGS.
3. MAINTAIN CLEARANCES.
(C) 4. CUT OFF ALL CONDUITS FLUSH WITH TOP OF PAD AND CAP CONDUIT.
5. SOD MAY BE REQUIRED AROUND PAD TO PREVENT SOIL EROSION.

VERIFICATION AREA - PLEASE COMPLETE AND SUBMIT TO UCF UES PRIOR TO ELECTRICAL INSPECTION

	Initials	Date		Initials	Date		Initials	Date		Initials	Date
(A)			(E)			(I)			(M)		
(B)			(F)			(J)			(N)		
(C)			(G)			(K)			(O)		
(D)			(H)			(L)			(P)		

FIGURE 13:
PAD MOUNTED TRANSFORMER CLEARANCES FROM BUILDINGS

Rev. 10/30/2017

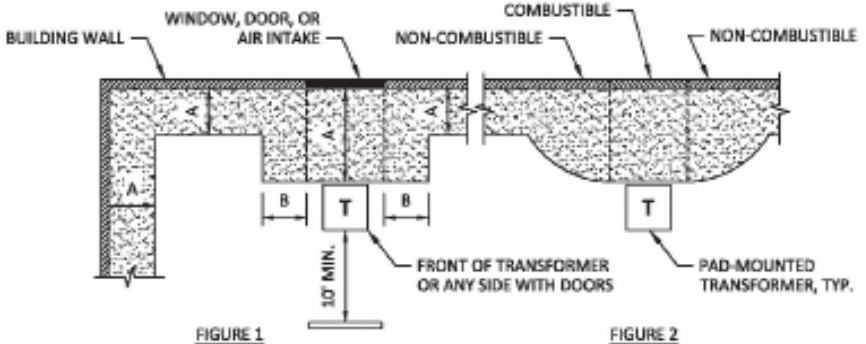

FIGURE 1
ALLOWABLE CLEARANCES

FIGURE 2
BUILDING CONSTRUCTION WITH COMBUSTIBLE AND NON-COMBUSTIBLE MATERIAL (SEE NOTE 5)

(A) TYPE OF CONSTRUCTION	(B) DIMENSION A: CLEARANCE EXTENDING OUT FROM BUILDING (FT)	(C) DIMENSION B: SIDE CLEARANCE MEASURED FROM EDGE OF WINDOW, DOOR, ETC. (FT)
NON-COMBUSTIBLE WALLS	3	N/A
COMBUSTIBLE WALLS	10	N/A
DOORS	20	10
WINDOWS (FIRST STORY)	10	10
WINDOWS (SECOND STORY)	REFER TO WALL TYPE	REFER TO WALL TYPE
AIR INTAKE	10	10
FIRE ESCAPES	20	20

NOTES:

1. ADEQUATE PASSAGEWAYS TO ACCOMMODATE CRANES, LINE TRUCKS, OR OTHER NECESSARY LIFTING AND HAULING EQUIPMENT SHALL BE PROVIDED TO ALLOW FOR MAINTENANCE, OPERATION, OR REPLACEMENT.
2. DISTANCES ARE FROM THE PAD OR TRANSFORMER CASING, WHICHEVER IS CLOSER TO THE BUILDING OR OPENING.
3. IF THE BUILDING HAS AN OVERHANG, THE DISTANCE IS MEASURED FROM THE OUTSIDE EDGE OF THE OVERHANG.
4. OUTSIDE WALKWAYS OR STAIRS ATTACHED TO THE BUILDING SHALL BE CONSIDERED AS PART OF THE BUILDING.
5. IF A BUILDING IS CONSTRUCTED OF BOTH COMBUSTIBLE AND NON-COMBUSTIBLE MATERIALS, NO PART OF THE PAD-MOUNTED TRANSFORMER CAN BE WITHIN THE ALLOWABLE DISTANCE FOR THE COMBUSTIBLE MATERIALS IN ANY DIRECTION.
6. DISTANCES LESS THAN THOSE SPECIFIED MAY BE ALLOWED IF APPROVED BY THE APPROPRIATE CODE ENFORCEMENT AUTHORITY, BUT IN NO CASE SHALL DISTANCES TO A BUILDING BE LESS THAN 3 FT. THIS MAY REQUIRE ALTERNATE MEANS OF FIRE PROTECTION INCLUDING FIRE BARRIERS, FIRE RATED WALLS, OIL CONTAINMENT MEANS, OR OTHER APPROVED MEASURES.
7. FIRE-RATED WALLS AROUND TRANSFORMERS MUST BE A MINIMUM OF 1'-0" ABOVE THE ANTICIPATED HEIGHT OF THE INSTALLED TRANSFORMER. NO WALL, WHETHER FOR FIRE PROTECTION OR AESTHETIC PURPOSES, CAN BE HIGH ENOUGH TO PREVENT DUKE ENERGY'S INSTALLATION AND FUTURE MAINTENANCE OF THE TRANSFORMER WITH STANDARD EQUIPMENT AND LIFTING DEVICES AS DETERMINED BY DUKE ENERGY.
8. FINAL GRADE AT THE LOCATION OF THE PAD-MOUNTED TRANSFORMER SHALL PROVIDE FOR MINERAL OIL TO DRAIN FROM THE BUILDING. OTHERWISE, AN OIL CONTAINMENT MEANS IS REQUIRED.
9. CLEARANCES LISTED ARE DUKE ENERGY MINIMUM REQUIREMENTS. THE LOCAL AHJ MAY HAVE REQUIREMENTS THAT ARE MORE STRINGENT. IT SHALL BE THE CUSTOMER'S RESPONSIBILITY TO CONFORM TO ALL LOCAL BUILDING CODES, INSURANCE REGULATIONS, OR ORDINANCES AFFECTING THE TRANSFORMER LOCATION.

VERIFICATION AREA - PLEASE COMPLETE AND SUBMIT TO UCF UES PRIOR TO ELECTRICAL INSPECTION

	Initials	Date		Initials	Date		Initials	Date		Initials	Date
(A)			(D)	NA	NA	(G)	NA	NA	(J)	NA	NA
(B)			(E)	NA	NA	(H)	NA	NA	(K)	NA	NA
(C)			(F)	NA	NA	(I)	NA	NA	(L)	NA	NA

FIGURE 14A:
SMALL PULL AND SPLICE BOX

Rev. 7/1/2019

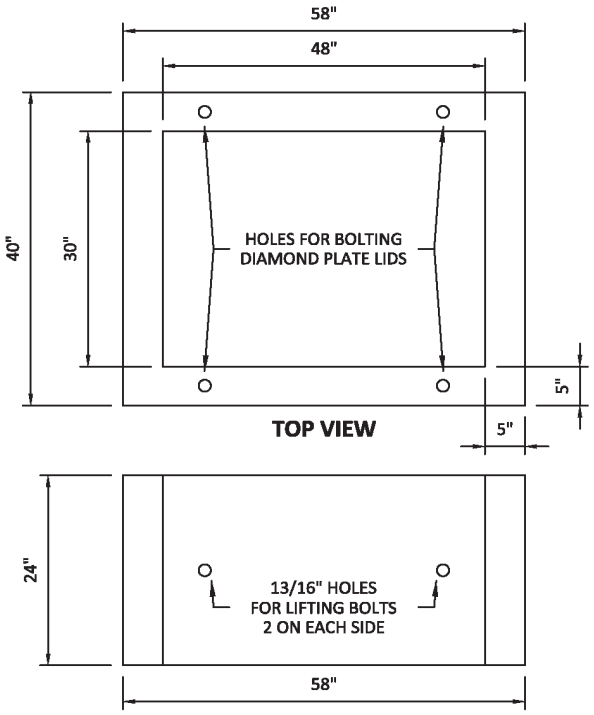

NOTES:
1. LIDS ARE DIAMOND PLATE (ITEM #320189) OR CONCRETE (ITEM #320188).
2. USE $\frac{1}{0}$ PRIMARY, THREE-PHASE CONDUCTOR MAXIMUM.
3. NO PULLING EYES.
4. NO BOTTOM.
5. FOUR (4) HOLES (2 ON EACH SIDE) FOR LIFTING BOX.
6. BELOW GRADE INSTALLATION REQUIRES ELECTRONIC POWER MARKER.
7. SEE DWG 24.07-03 FOR LIDS.
8. DO NOT FILL INTERIOR OF BOX..

VERIFICATION AREA - PLEASE COMPLETE AND SUBMIT TO UCF UES PRIOR TO ELECTRICAL INSPECTION

	Initials	Date		Initials	Date		Initials	Date		Initials	Date
A			D	NA	NA	G	NA	NA	J	NA	NA
B			E	NA	NA	H	NA	NA	K	NA	NA
C			F	NA	NA	I	NA	NA	L	NA	NA

FIGURE 14B:
LIDS FOR SMALL PULL AND SPLICE BOX

Rev. 7/1/2019

CONCRETE LID
ITEM #320188
(INCLUDES TWO PIECES)

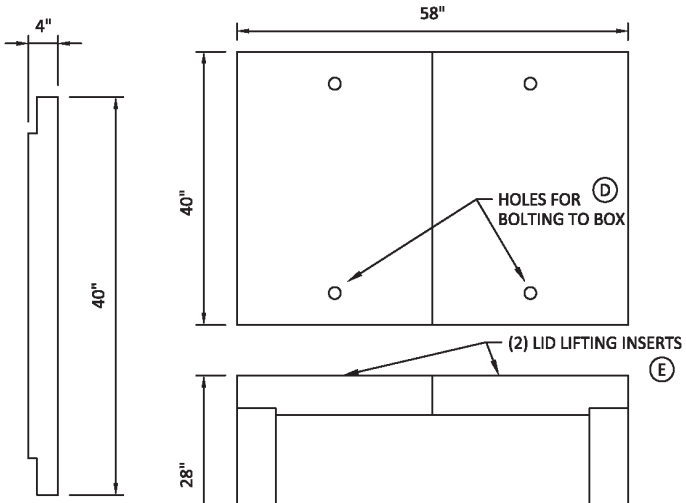

GALVANIZED LID
ITEM #320189
(INCLUDES TWO PIECES)

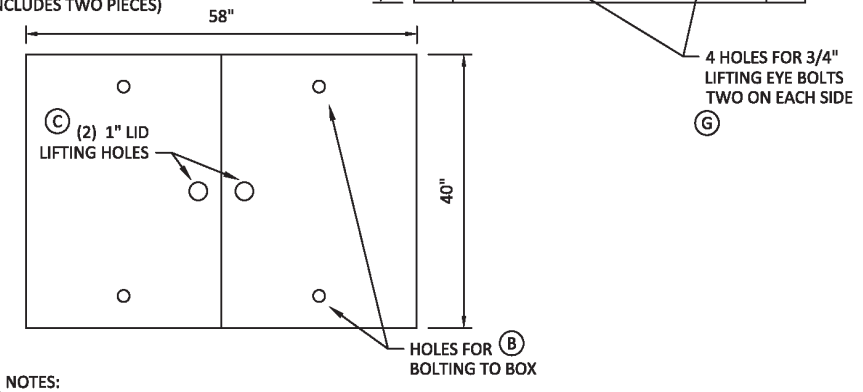

NOTES:
A 1. LID MUST BE SECURED TO BOX USING 1/2" X 1" STAINLESS STEEL BOLTS.

VERIFICATION AREA - PLEASE COMPLETE AND SUBMIT TO UCF UES PRIOR TO ELECTRICAL INSPECTION

	Initials	Date		Initials	Date		Initials	Date		Initials	Date
A			C			E			G		
B			D			F			H	NA	NA

FIGURE 13: Rev. 10/30/2017

PAD MOUNTED TRANSFORMER CLEARANCES FROM BUILDINGS

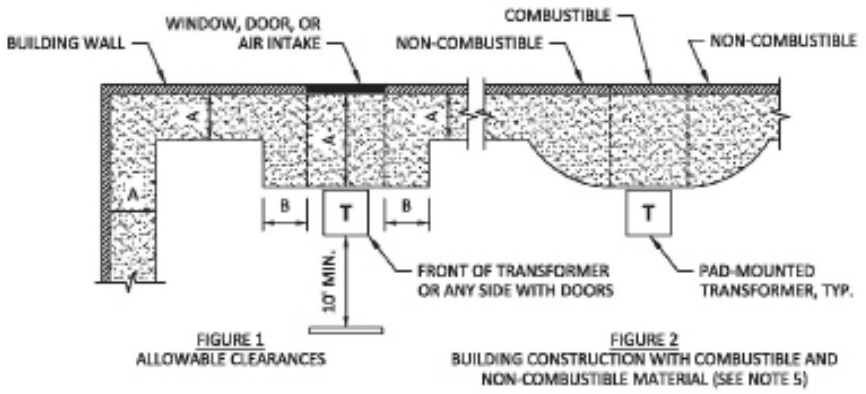

FIGURE 1
ALLOWABLE CLEARANCES

FIGURE 2
BUILDING CONSTRUCTION WITH COMBUSTIBLE AND NON-COMBUSTIBLE MATERIAL (SEE NOTE 5)

(A) TYPE OF CONSTRUCTION	(B) DIMENSION A: CLEARANCE EXTENDING OUT FROM BUILDING (FT)	(C) DIMENSION B: SIDE CLEARANCE MEASURED FROM EDGE OF WINDOW, DOOR, ETC. (FT)
NON-COMBUSTIBLE WALLS	3	N/A
COMBUSTIBLE WALLS	10	N/A
DOORS	20	10
WINDOWS (FIRST STORY)	10	10
WINDOWS (SECOND STORY)	REFER TO WALL TYPE	REFER TO WALL TYPE
AIR INTAKE	10	10
FIRE ESCAPES	20	20

NOTES:
1. ADEQUATE PASSAGEWAYS TO ACCOMMODATE CRANES, LINE TRUCKS, OR OTHER NECESSARY LIFTING AND HAULING EQUIPMENT SHALL BE PROVIDED TO ALLOW FOR MAINTENANCE, OPERATION, OR REPLACEMENT.
2. DISTANCES ARE FROM THE PAD OR TRANSFORMER CASING, WHICHEVER IS CLOSER TO THE BUILDING OR OPENING.
3. IF THE BUILDING HAS AN OVERHANG, THE DISTANCE IS MEASURED FROM THE OUTSIDE EDGE OF THE OVERHANG.
4. OUTSIDE WALKWAYS OR STAIRS ATTACHED TO THE BUILDING SHALL BE CONSIDERED AS PART OF THE BUILDING.
5. IF A BUILDING IS CONSTRUCTED OF BOTH COMBUSTIBLE AND NON-COMBUSTIBLE MATERIALS, NO PART OF THE PAD-MOUNTED TRANSFORMER CAN BE WITHIN THE ALLOWABLE DISTANCE FOR THE COMBUSTIBLE MATERIALS IN ANY DIRECTION.
6. DISTANCES LESS THAN THOSE SPECIFIED MAY BE ALLOWED IF APPROVED BY THE APPROPRIATE CODE ENFORCEMENT AUTHORITY, BUT IN NO CASE SHALL DISTANCES TO A BUILDING BE LESS THAN 3 FT. THIS MAY REQUIRE ALTERNATE MEANS OF FIRE PROTECTION INCLUDING FIRE BARRIERS, FIRE RATED WALLS, OIL CONTAINMENT MEANS, OR OTHER APPROVED MEASURES.
7. FIRE-RATED WALLS AROUND TRANSFORMERS MUST BE A MINIMUM OF 1'-0" ABOVE THE ANTICIPATED HEIGHT OF THE INSTALLED TRANSFORMER. NO WALL, WHETHER FOR FIRE PROTECTION OR AESTHETIC PURPOSES, CAN BE HIGH ENOUGH TO PREVENT DUKE ENERGY'S INSTALLATION AND FUTURE MAINTENANCE OF THE TRANSFORMER WITH STANDARD EQUIPMENT AND LIFTING DEVICES AS DETERMINED BY DUKE ENERGY.
8. FINAL GRADE AT THE LOCATION OF THE PAD-MOUNTED TRANSFORMER SHALL PROVIDE FOR MINERAL OIL TO DRAIN FROM THE BUILDING. OTHERWISE, AN OIL CONTAINMENT MEANS IS REQUIRED.
9. CLEARANCES LISTED ARE DUKE ENERGY MINIMUM REQUIREMENTS. THE LOCAL AHJ MAY HAVE REQUIREMENTS THAT ARE MORE STRINGENT. IT SHALL BE THE CUSTOMER'S RESPONSIBILITY TO CONFORM TO ALL LOCAL BUILDING CODES, INSURANCE REGULATIONS, OR ORDINANCES AFFECTING THE TRANSFORMER LOCATION.

VERIFICATION AREA - PLEASE COMPLETE AND SUBMIT TO UCF UES PRIOR TO ELECTRICAL INSPECTION

	Initials	Date		Initials	Date		Initials	Date		Initials	Date
(A)			(D)	NA	NA	(G)	NA	NA	(J)	NA	NA
(B)			(E)	NA	NA	(H)	NA	NA	(K)	NA	NA
(C)			(F)	NA	NA	(I)	NA	NA	(L)	NA	NA

Domestic Water Service and Meter Installation Requirements

GENERAL INFORMATION

1. UES manages domestic water service throughout the UCF Main Campus. These standards are intended to identify any items that must exceed industry and/or code-required minimums.
2. Water meters are utilized for utility billing, savings calculations, demand profiling, and performance monitoring. An accurate and properly-selected and installed system is essential to these functions.
3. For ease of use, this section of the construction standards provides multiple 8.5"x11" details or Figures. These details are used to convey critical information to the designer, track the designer's progress, and verify the contractor's installation. These details or Figures are provided in the table below and are intended to be incorporated into the construction documents by the designer, as applicable, after confirming they meet all current code and design-intent requirements.

ALL Projects	As Applicable
DW - Figure 00, 01A, 01B	DW - Figure 02, 03, 04, 05, 06, 07, 08, 09A, 09B, 10

TYPICAL REQUIREMENTS

1. System Size Computation: The allowable minimum service pressure must not be less than 20 pounds per square inch.
2. Normal Flow: Flow demands must be based on the output capacity of the water plant. Design of water systems must account for peak flow rates for the entire campus.
3. Fire Flow: Fire hydrant flow tests shall be witnessed by UES. The results of the tests shall be provided to UES for record keeping.
4. Fire Hydrant Locations: Hydrants must be served by a

valve stub not less than 6" IPS, and must connect to a main not less than 8" IPS. UES shall be consulted in all cases where the existing main servicing the site is 6" IPS or less.

5. Fire Hydrants - Approved Manufacturers
    - Mueller Super Centurian A423 with 5-1/4" barrel or approved equal. Must meet ANSI/AWWA C502 standard, UL246 and FM1510 certified to ANSI/NSF61.
    - Hydrants must be equipped with a minimum of one pumper outlet nozzle 4-1/2 inches in diameter and two hose nozzles 2-1/2 inches in diameter
    - Threads, nozzle caps, operating nuts, and cap color must conform to the National Fire Protection (NFPA) 291 for the color markings of fire hydrants. Barrel color must be yellow.
    - Prepare and prime all surfaces prior to painting.
        - Fire hydrant body painted using Rust-Oleum Fire Hydrant Enamel Yellow 202790 Part #43828 or approved equal.
        - Cap colors selected according to class and corresponding GPM. Cap color must correspond to GPM flow at the hydrant. Refer to Figure 10 for hydrant flow capacity classifications.
        - Refer to Figure 10 below for statutes, ordinances, and govering NFPA standard numbers.
    - Units must be traffic type with breakable safety coupling located below barrel break line to preclude valve opening.
    - Valve must be compression-type with 5-1/4 inches minimum valve opening and shoe inlet connection to be 6 inches minimum.
    - Hydrants must be secured with restraining assemblies.
    - All units must be designed and installed to be self-draining.
    - Gravel or crushed stone for the drain sump must be provided.
6. Valve Locations
    - Valves must be provided for all branch connections, main ends, fire hydrant stubs, or other locations.
    - Distribution loops must have the ability of being isolated.
    - Valves are to be placed so that the maximum allowable length of water main required to be shut down for repair work must be two hundred feet in high density or five hundred feet in other areas. High density is defined as any building 20,000 sqft or greater.
7. Water main materials must be ductile iron pressure water pipe or PVC pressure pipe. Gate valves, Mueller 2360 or UES-approved equal, must be provided at all new branches, fire hydrants, backflow prevention devices, and meters.
8. Water lines will be disinfected according to AWWA Standard C-601 and must be witnessed by UES. Results of bacterological tests shall be submitted to UES via the UCF Project Manager for review and approval.
9. All pipes must be tested for leakage by filling with water to a pressure of 150 lbs. The pipes must withstand this test for two hours without any decrease in pressure.
    - All pipe leakage testing must be witnessed by UES. The testing contractor shall notify UES at least 48 hours prior to starting the test.
    - Any leaks identified by pressure testing shall be repaired by the contractor at no additional cost to UCF.
10. Pipes and Pipe Fittings
    - Installation
        - Materials must be cleaned and maintained clean,

with all coatings protected from damage. The interior of the pipe must be free of dirt and debris, and when work is not in progress, all open ends must be plugged.

- Materials for domestic water systems, including taps, repairs, etc., must be disinfected in compliance with AWWA C601 and C900.
- Water from these pipes must not be used for any purpose prior to receipt of satisfactory test results.
- Underground pressure piping system located in the traveled way or planned traveled way must be installed with minimum three feet of cover.
- Exposed systems must be supported as necessary to hold the piping and appurtenances in a firm, substantial manner to the required lines and grades indicated, with no undue piping stresses transmitted to equipment or other items.
- Pipe above ground and outside of buildings must be supported on concrete supports.

- Pipes and Pipe Fittings
  - All pipe and fittings must be clearly marked with the name or trademark of the manufacturer, the batch number, the location of the plant, and the strength designation, as applicable.
  - All piping and fittings for water service must meet current American National Standards Institute (ANSI), American Society for Testing and Materials (ASTM), and AWWA standards.
  - Main distribution piping over ten inches shall be ductile iron. Service piping will be PVC.
- Piping Not Permitted
  - Galvanized piping is prohibited.
- Piping Permitted
  - 2” and below shall use polyethylene
  - 3-10” shall use C900 PVC
  - Greater than 10” shall use Ductile Iron
  - 2.5” pipe shall NOT be used
- Polyvinyl Chloride (PVC)
  - Connections for pipe three inches in diameter and larger must be rubber compression ring type with restrained joints per AWWA guidelines.
- Valves
  - All valves must be American manufactured and the valve type, size rating, and flow direction arrow must be clearly marked on each unit.
  - All valves shall be fully ported.
  - Hand wheel valves are not permitted.
- Underground Service (General)
  - All valves must be American-manufactured.
  - Valves must be iron body, epoxy-coated, bronze-mounted, solid wedge (resilient seated) or double-disc (water), non-rising stem type, and must be equipped with two inch square cast iron wrench nuts.
- Above Ground Service (General)
  - Valves must be iron body, bronze-mounted gate valves, solid wedge (resilient seated), with the exception that valves must have an outside screw and yoke (OS&Y), rising stem type.
  - Valves must have cast iron hand wheels or chain operators with galvanized steel chains.

11. Backflow Preventers
    - The assembly must be the reduced pressure type, with shut-off gate valves provided at each end and must comply with the applicable provisions of AWWA

Standard C506, "Backflow Prevention Devices--Reduced Pressure Principle and Double Check Valve Types".

- Backflow preventers must be manufactured by Wilkins or approved equal.
  - Provide type RPZ, model 975 XL or approved equal for 2" lines or smaller.
  - Provide model 375 or approved equal for 3" lines or larger for building installations.
- For 2" and smaller, the pipe supporting the assembly must be copper.
- For 3" and larger, the pipe supporting the assembly must be ductile iron.
- All backflow preventers must be installed with concrete pads and protected by yellow rounded top concrete bollards. All pipes shall be sleeved with PVC where adjacent to or pertaining concrete.
- The lowest point of a backflow assembly must be at least 12" above concrete pad.
- Hose bibbs are not permitted on backflow preventers.
- Backflow assembly must have a minimum of 3 feet of clearance on all sides. This includes landscaping.
- All backflow preventers must be tested by a certified testing agency. After the backflow preventer is installed, the assembly shall be tested and passed by a testing agency that carries a FL AWWA endorsement showing that the Florida Section of the AWWA has endorsed the certification process. The test report shall have all the testing requirements annotated as well as the license number of the tester and the calibration date of the test equipment. Test equipment calibration shall not be over a year old. These must be forwarded to UES via the UCF Project Manager for review and approval.
- Results of backflow preventer testing and maintenance reports must be submitted to UES before service is turned on.
- Backflow preventers and their associated connections, piping, and fittings must be provided with a painted finish suitable for the application.
  - Domestic Water = Rust-Oleum Safety Blue or approved equal

METERING

All meters will be provided by UES. Both the meter and installation will be paid from project funds. The meter becomes property of the university after final Certificate of Occupancy is issued.

PLAN REVIEW AND COORDINATION WITH UCF UES

1. Coordination of domestic water service and metering requirements with UES is important for the success of the project.
2. At the 50% Construction Document Phase the following shall be shown on plans and reviewed with UES:
   - Design flows, diversity factors, and method of computation
   - Methodology used for the diversity factors
   - Proposed routing of domestic water service from campus main distribution to the building
   - Proposed location of meter
   - Proposed metering configuration
   - All included Figures identified by UES for the service type. Designer shall identify any aspects of the Figure that cannot or will not be provided.

   All requested Figures shall be submitted to UES through the UCF Project Manager.
3. At the 100% Construction Document Phase the following

shall be shown on plans and reviewed with UES:

- Design flows, diversity factors, and method of computation
- Methodology for the diversity factors
- Final location of meter
- Final metering configuration
- All included Figures identified by UCF for the service type. Designer shall identify any aspects of the Figure that cannot or will not be provided.

All requested Figures shall be submitted to UES through the UCF Project Manager.

FIELD INSPECTIONS WITH UCF UES

1. All installations in field shall be coordinated 2 business days in advance for witnessing and/or inspections by UCF UES.

DW - FIGURE 00: GENERAL NOTES RELATED TO DOMESTIC WATER DISTRIBUTION & METERING Rev. 10/30/2017

1. REFER TO RESPONSIBILITY TABLE FOR PARTY DESIGNING, PROVIDING, INSTALLING, TERMINATING AND VERIFYING COMPONENTS.
2. (A) WATER METERS MUST BE PROVIDED ON ALL DOMESTIC WATER MAIN CONNECTIONS.
3. (B) ALL WATER METERS MUST BE MOUNTED ABOVE-GROUND, HORIZONTALLY AND LEVEL. ANY DEVIATIONS REQUIRING A VERTICAL INSTALLATION MUST RECEIVE WRITTEN APPROVAL FROM UCF UES PRIOR TO INSTALLATION.
4. (C) ALL METERS SHALL BE LOCATED BEFORE THE BACKFLOW ASSEMBLY AND INCLUDE THE MANUFACTURER REQUIRED UPSTREAM AND DOWNSTREAM STRAIGHT PIPE DIAMETERS FROM VALVES, ELBOWS AND OTHER EQUIPMENT.
5. (D) ALL DOMESTIC WATER METERS MUST BE INSTALLED ON THE EXTERIOR OF THE FACILITY FOR EASE OF ACCESS, REPAIR, MAINTENANCE, AND CLARITY OF RADIO FREQUENCY TRANSMISSION SIGNALS.
6. (E) ITRON 100W TRANSMITTERS MUST NOT BE MOUNTED WITHIN 20 FEET OF AN ELECTRIC UTILITY TRANSFORMER TO AVOID SIGNAL TRANSMISSION DEGRADATION. ADDED LENGTH OF WIRE CAN BE ORDERED AS NEEDED TO REMOTELY EXTEND THE TRANSMITTER TO A MORE SUITABLE LOCATION. THIS MUST BE SPECIFIED TO UCF UES PRIOR TO SUBMITTING THE REQUEST FOR THE NEW WATER SERVICE OR METER.
7. (F) ITRON 100W TRANSMITTERS COME WITH THREE OUTPUT CONNECTIONS. THE REGISTER MUST ONLY BE CONNECTED TO THE "BLACK" PORT ON THE ITRON TRANSMITTER TO AVOID SHORTING AND DAMAGING THE TRANSMITTER (ERT). THE RED AND BLUE PORTS ARE NOT TO BE USED.
8. (G) ITRON 100W TRANSMITTERS WITH DIRECT EXPOSURE TO SUN MUST BE MOUNTED IN A SMALL UV PROTECTED NON-METALLIC (POLY/PLASTIC) ENCLOSURE THAT MUST BE WALL OR PIPE MOUNTED WITH THE TRANSMITTER SERIAL NUMBER VISIBLE THROUGH TRANSLUCENT COVER OF THE ENCLOSURE.
9. (H) FLUSHING AND TESTING OF PIPING SYSTEM MUST BE PERFORMED BY THE CONTRACTOR AND WITNESSED BY UCF UES OR A DESIGNATED REPRESENTATIVE. CONTRACTOR SHALL NOTIFY UCF UES AT LEAST 48 HOURS PRIOR TO TEST.
10. (I) PIGGING MUST BE PERFORMED FOR ALL DOMESTIC WATER MAINS. IT WILL NOT BE REQUIRED FOR SERVICE LINES.
11. (J) ALL UTILITIES, VALVES, FITTINGS, PIPES WILL HAVE X, Y AND Z GPS COORDINATES TAKEN AND ATTACHED TO THE AS-BUILTS AS WELL AS PROVIDED IN ELECTRONIC FORMAT AS SPECIFIED BY THE UCF UES GIS MANAGER.
12. (K) ALL PIPELINES SHALL BE BURIED TO THE GREATEST EXTENT POSSIBLE. MINIMUM COVER FOR THE BURIED PIPELINES SHALL BE 36-INCHES TO THE TOP OF THE PIPE.
13. (L) WATER CONNECTIONS SHALL NOT BE OPENED BY UCF UES UNTIL A SCANNED COPY OF THE AS-BUILT DOCUMENTS HAVE BEEN SUBMITTED AND APPROVED BY UCF UES.
14. (M) DIFFERENT UTILITIES SHALL NOT BE STACKED WITHIN THE SAME TRENCH.

VERIFICATION AREA - PLEASE COMPLETE AND SUBMIT TO UCF UES PRIOR TO 100% CONSTRUCTION DOCUMENTS

	Initials	Date
(A)		
(B)		
(C)		
(D)		

	Initials	Date
(E)		
(F)		
(G)		
(H)		

	Initials	Date
(I)		
(J)		
(K)		
(L)		

	Initials	Date
(M)		
(N)	NA	NA
(O)	NA	NA
(P)	NA	NA

DW - FIGURE 01A: WATER METER MATRIX

Rev. 6/07/2017

LINE SIZE RANGE	LINE SIZE	*MODEL	MEASUREMENT TYPE	RECOMMENDED MAX CONTINUOUS FLOW	CONSTRUCTION MATERIAL (METERS & FLANGES)	MANDATORY STRAINER REQUIREMENT	RF TRANSMITTER	INSTALLATION TYPE
5/8" - 2"	5/8"	M-25	DISC (NUTATING)	15 GPM	BRONZE	INTEGRAL	ITRON 100W DLN	HORIZONTAL
	3/4"	M-35		25 GPM				
	1"	M-70		40 GPM				
	1.5"	M-120		80 GPM				
	2"	M-170		100 GPM				
3" - 8"	3"	T-450	TURBINE/ROTOR	450 GPM	BRONZE	INTEGRAL	ITRON 100W DLN	HORIZONTAL
	4"	T-1000		1000 GPM	CAST IRON	INTEGRAL		
	6"	T-2000		2000 GPM	CAST IRON	SEPARATE, BOLT ON		
	8"	T-3500		3500 GPM	CAST IRON			
10" AND UP	10"	T-5500	ELECTROMAGNETIC	5500 GPM	CAST IRON	SEPARATE, BOLT ON	ITRON 100W DLN	HORIZONTAL OR VERTICAL
	12"	T-6200		6200 GPM				
	16"	T-6600		6600 GPM				
	20"	T-10000		10000 GPM				
2", 3", 4", 6" (APPLIC-ATION SPECIFIC)	VARIOUS	VARIOUS	COMPOUND TURBINE (HIGH FLOW) & DISC (LOW FLOW)	--	2" & 3" = BRONZE 4" & 6" = CAST IRON	SEPARATE, BOLT ON	ITRON 100W DLN (2 REQ'D, ONE FOR HIGH AND LOW REGISTERS)	HORIZONTAL

NOTES:
1. REGISTER TYPE SHALL BE ABSOLUTE DIGITAL ENCODER (ADE) FOR ALL METERS.
2. REGISTER COLOR SHALL BE BLACK FOR ALL METERS.
3. REGISTER UNITS SHALL BE GALLONS FOR ALL UNITS.

*BADGER MODEL IIS OR APPROVED EQUAL.

DW - FIGURE 01B: WATER METERING RESPONSIBILITY TABLE

Rev. 11/17/2017

RESPONSIBILITY TABLE

COMPONENT	DESIGN BY (NOTE 1)	PROVIDED BY	INSTALLED BY	TERMINATED BY	VERIFIED BY
WATER METER	SIZE/QTY - UCF LOCATION - EOR, UCF UES	UCF UES	CONTRACTOR	--	EOR & UCF UES
METER RF TRANSMITTER	UCF UES	UCF UES	UCF UES	UCF UES	UCF UES
ALL OTHER COMPONENTS NOT RELATED TO METER	EOR, UCF UES	CONTRACTOR	CONTRACTOR	CONTRACTOR	EOR & UCF UES

NOTES:
1. WHEN REQUIREMENTS ARE PROVIDED BY UCF UES, THEY SHALL BE CONSIDERED REQUESTS IN ADDITION TO CODE REQUIRED MINIMUMS. ENGINEER OF RECORD (EOR) SHALL REVIEW, CONFIRM APPLICABILITY OF REQUESTS AND INCORPORATE THESE ITEMS INTO THE PROJECT DOCUMENTS AS APPLICABLE.
2. TERMINATION INCLUDES INSTALLATION OF COMPONENTS AND PROPER TERMINATION OF WIRING BETWEEN COMPONENTS.

DW - FIGURE 02: STANDARD ROADWAY OPEN CUT DETAIL

Rev. 7/10/2019

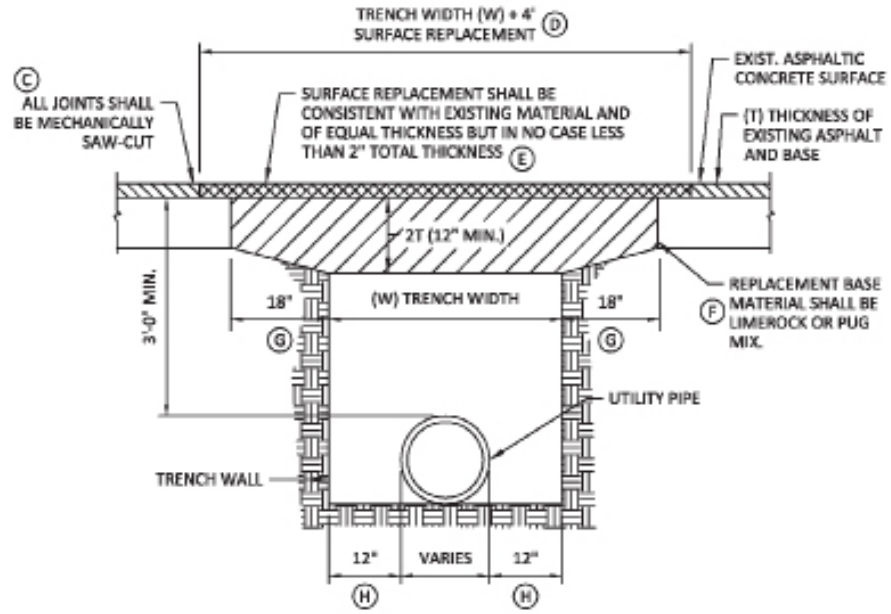

NOTES:

(A) 1. BACKFILL SHALL BE PLACED IN 6" LAYERS FROM BENEATH THE HAUNCHES OF THE PIPE TO THE BASE AND COMPACTED TO 98% DENSITY PER AASHTO T-180 MODIFIED PROCTER.

(B) 2. BASE MATERIALS SHALL BE PLACED IN TWO OR THREE LAYERS ROLLED AND TAMPED TO ABOVE SPECIFIED DENSITY.

VERIFICATION AREA - PLEASE COMPLETE AND SUBMIT TO UCF UES PRIOR TO 100% CONSTRUCTION DOCUMENTS

	Initials	Date		Initials	Date		Initials	Date		Initials	Date
(A)			(E)			(I)	NA	NA	(M)	NA	NA
(B)			(F)			(J)	NA	NA	(N)	NA	NA
(C)			(G)			(K)	NA	NA	(O)	NA	NA
(D)			(H)			(L)	NA	NA	(P)	NA	NA

DW - FIGURE 03: LOCATING WIRE TERMINAL

Rev. 11/17/2017

PLAN VIEW

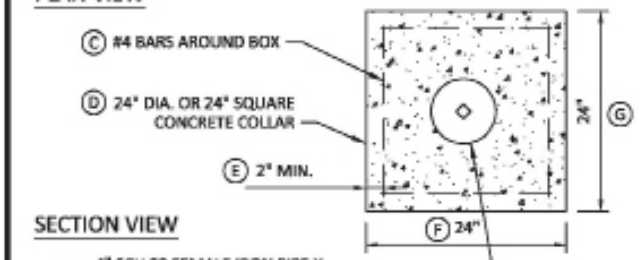

SECTION VIEW

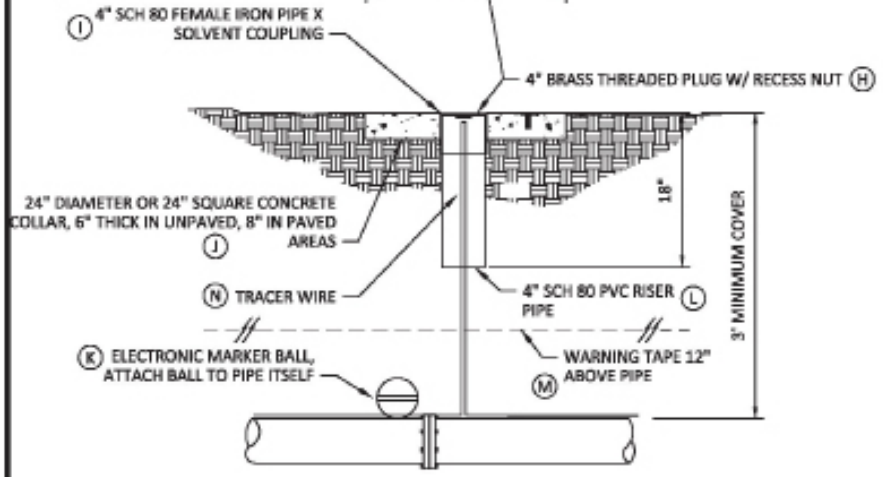

NOTES:

(A) 1. LOCATING WIRE TERMINAL SHALL BE PROVIDED ALONG BURIED UTILITY WHERE DISTANCE BETWEEN VALVE BOXES EXCEEDS 300 FEET. LOCATING WIRE TERMINAL SHALL BE PROVIDED AT 300 FOOT INTERVALS NOT GREATER THAN 300 FEET IN THESE INSTANCES.

(B) 2. LOCATOR WIRE ACCESS - 4" SCHEDULE 80 PVC, FEMALE ADAPTER COUPLING AND 4" BRASS PLUG WITH RECESSED NUT. TERMINATE INSULATED, SOLID 10 GAUGE COPPER LOCATOR WIRES AT TOP WITH 12" OF EXTRA WIRE. INSULATED WIRE SHALL BE COLOR CODED.

VERIFICATION AREA - PLEASE COMPLETE AND SUBMIT TO UCF UES PRIOR TO 100% CD RELEASE

	Initials	Date		Initials	Date		Initials	Date		Initials	Date
(A)			(F)			(K)			(P)	NA	NA
(B)			(G)			(L)			(Q)	NA	NA
(C)			(H)			(M)			(R)	NA	NA
(D)			(I)			(N)			(S)	NA	NA
(E)			(J)			(O)	NA	NA	(T)	NA	NA

DW - FIGURE 04: VALVE & VALVE BOX DETAIL

Rev. 10/30/2017

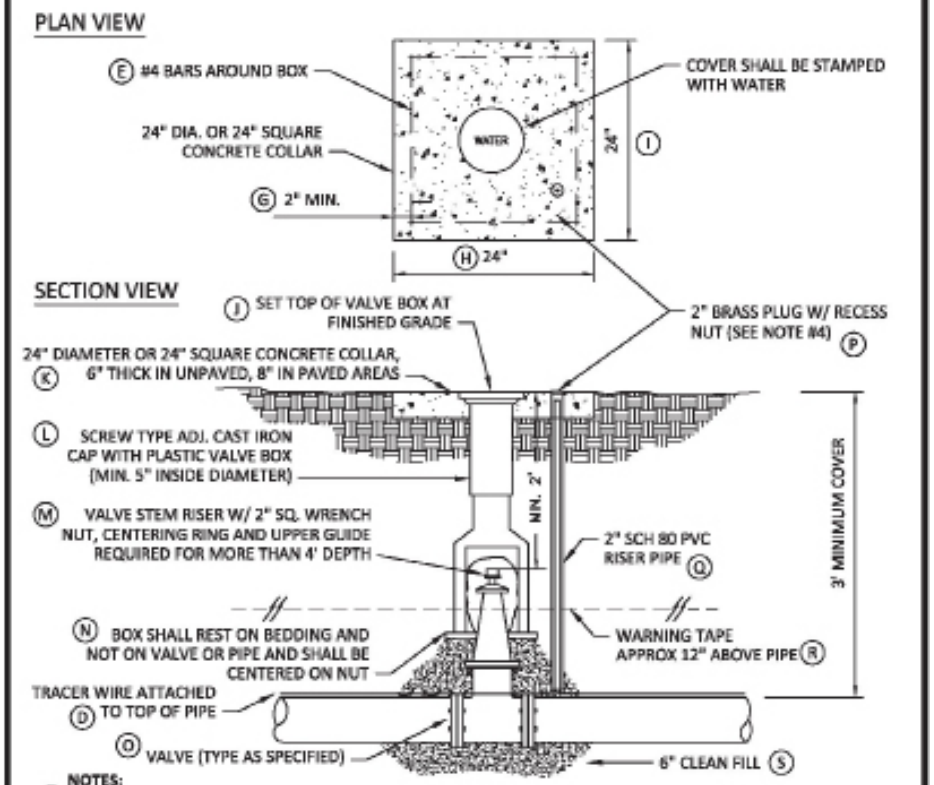

NOTES:

A 1. VALVES SHALL NOT BE LOCATED IN STREET CURBS.
B 2. VALVE COVERS SHALL BE PAINTED BLUE FOR WATER.
C 3. LOCATOR WIRE ACCESS - 2" SCHEDULE 80 PVC, FEMALE ADAPTER COUPLING AND 2" BRASS PLUG WITH RECESSED NUT. TERMINATE INSULATED TRACER WIRES AT TOP WITH 12" OF EXTRA WIRE.

VERIFICATION AREA - PLEASE COMPLETE AND SUBMIT TO UCF UES PRIOR TO 100% CD RELEASE

	Initials	Date		Initials	Date		Initials	Date		Initials	Date
A			F			K			P		
B			G			L			Q		
C			H			M			R		
D			I			N			S		
E			J			O			T	NA	NA

DW - FIGURE 05: DOMESTIC WATER REMOTE PRESSURE AND SAMPLING POINT

Rev. 6/07/2017

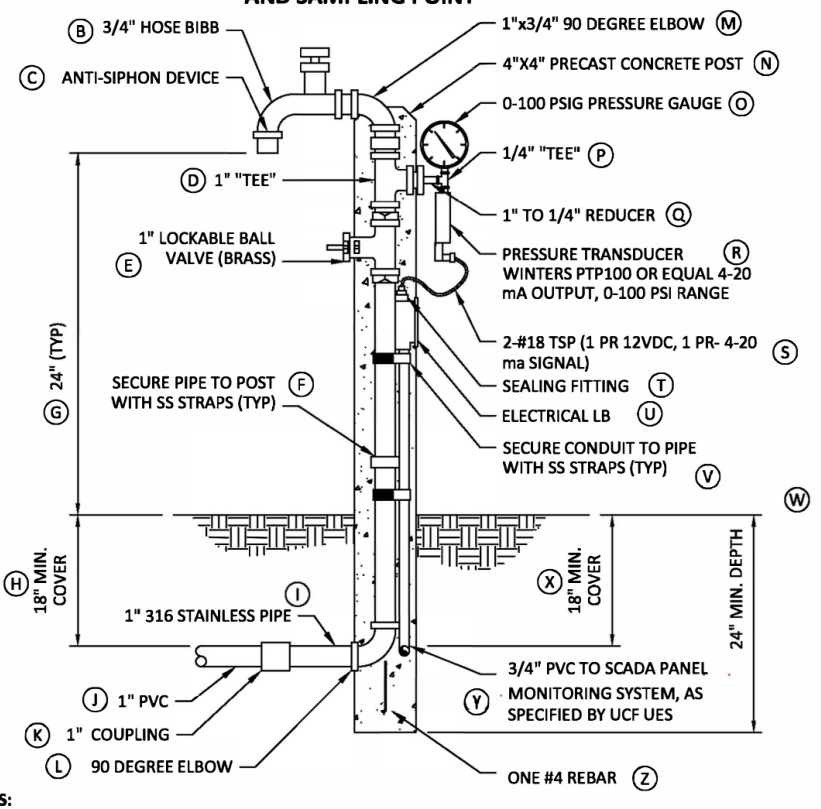

NOTES:

A 1. Placeholder for future requirements.

VERIFICATION AREA - PLEASE COMPLETE AND SUBMIT TO UCF UES PRIOR TO 100% CONSTRUCTION DOCUMENTS

	Initials	Date		Initials	Date		Initials	Date		Initials	Date
A	NA	NA	H			O			V		
B			I			P			W		
C			J			Q			X		
D			K			R			Y		
E			L			S			Z		
F			M			T			AA	NA	NA
G			N			U			AB	NA	NA

DW - FIGURE 07: 3" AND LARGER DOMESTIC WATER METER

Rev. 7/1/2019

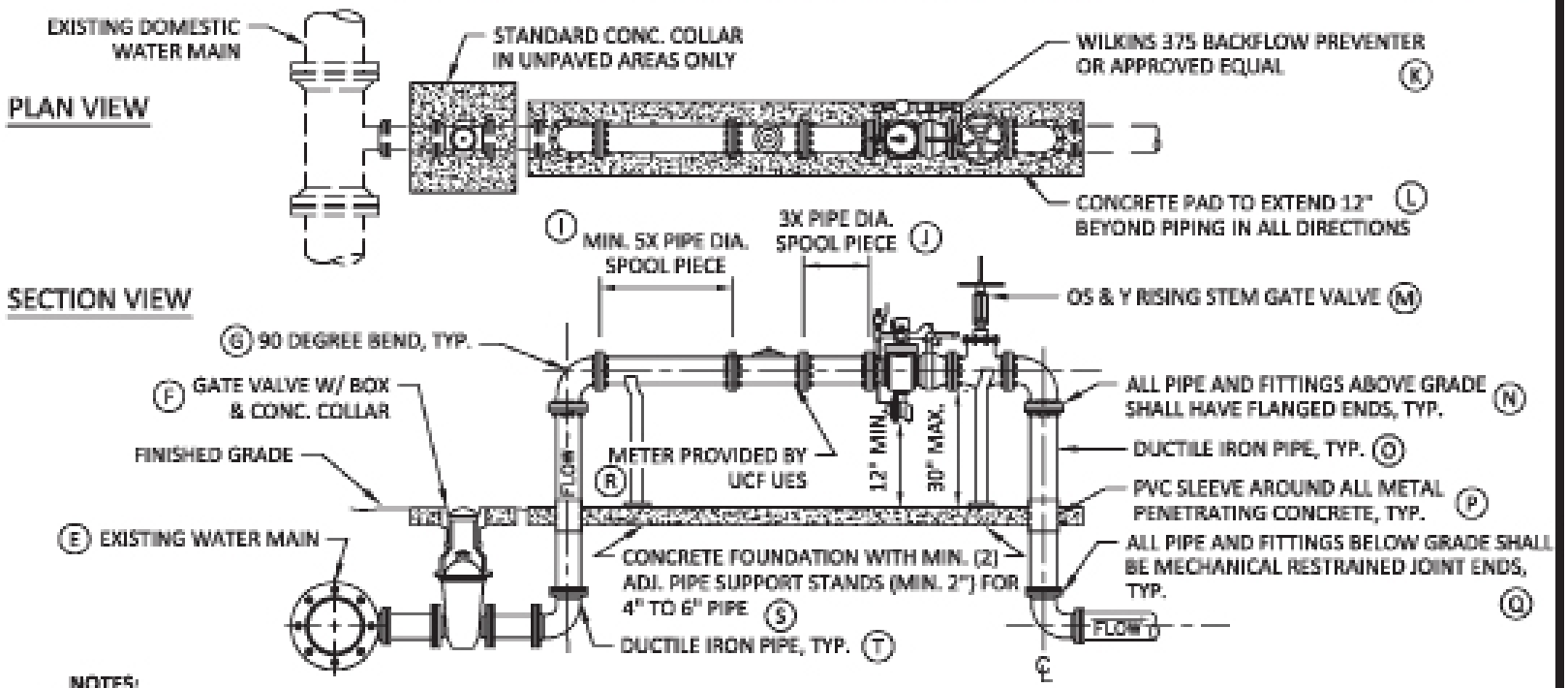

NOTES:

(A) 1. PIPE SHALL BE COLOR CODED AND MARKED TO UCF UES SPECIFICATIONS.
(B) 2. INSTALLATION SHALL COMPLY WITH ALL REQUIREMENTS OF 62-555 F.A.C.
(C) 3. PIPING AND APPURTENANCES SHALL BE PAINTED PER UCF UES STANDARDS.

VERIFICATION AREA - PLEASE COMPLETE AND SUBMIT TO UCF UES PRIOR TO 100% CONSTRUCTION DOCUMENTS

	Initials	Date
(A)		
(B)		
(C)		
(D)	NA	NA

	Initials	Date
(E)		
(F)		
(G)		
(H)	NA	NA

	Initials	Date
(I)		
(J)		
(K)		
(L)		

	Initials	Date
(M)		
(N)		
(O)		
(P)		

	Initials	Date
(Q)		
(R)		
(S)		
(T)		

DW - FIGURE 06: WATER MAIN WET TAP

Rev. 10/30/2017

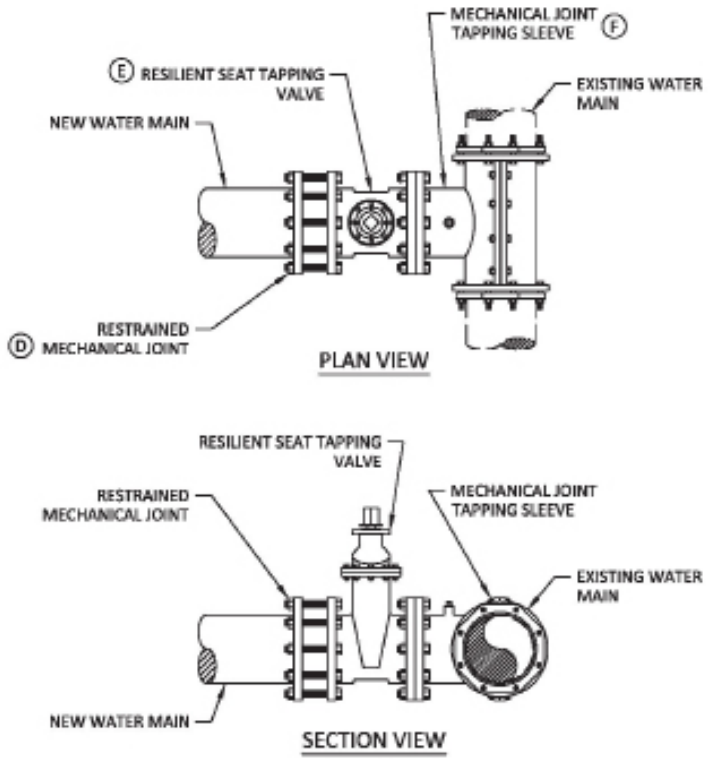

NOTES:

(A) 1. ALL TAPPING SHALL BE WITNESSED BY UCF UES OR A DESIGNATED REPRESENTATIVE. THE INSTALLING CONTRACTOR SHALL NOTIFY UCF UES AT LEAST 48 HRS PRIOR TO THE START.

(B) 2. TAPPING SLEEVES UTILIZE MECHANICAL JOINTS, WITH OUTLET FLANGE ANSI B16.1 125 STANDARD, AND MUST BE MUELLER H-304SS OR UCF UES APPROVED EQUAL.

VERIFICATION AREA - PLEASE COMPLETE AND SUBMIT TO UCF UES PRIOR TO 100% CONSTRUCTION DOCUMENTS

	Initials	Date		Initials	Date		Initials	Date		Initials	Date
(A)			(E)			(I)	NA	NA	(M)	NA	NA
(B)			(F)			(J)	NA	NA	(N)	NA	NA
(C)	NA	NA	(G)	NA	NA	(K)	NA	NA	(O)	NA	NA
(D)			(H)	NA	NA	(L)	NA	NA	(P)	NA	NA

DW - FIGURE 08: GAUGE DIAPHRAGM ASSEMBLY

Rev. 7/1/2019

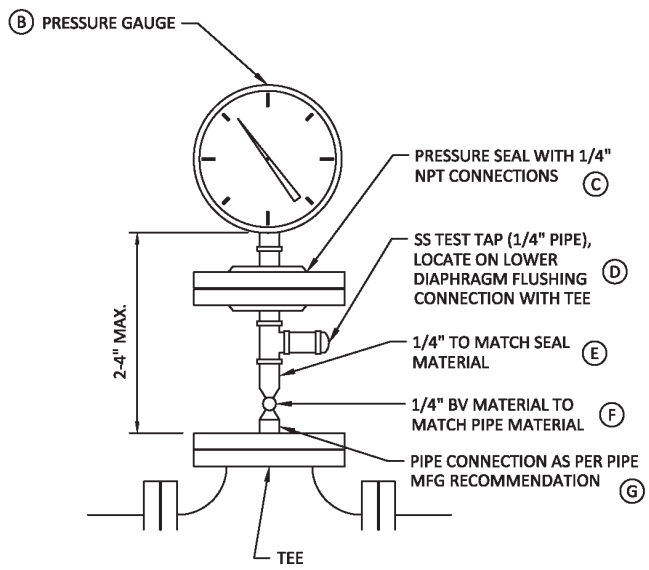

NOTES:

(A) 1. PLACEHOLDER FOR FUTURE NOTES.

VERIFICATION AREA - PLEASE COMPLETE AND SUBMIT TO UCF UES PRIOR TO 100% CONSTRUCTION DOCUMENTS

	Initials	Date		Initials	Date		Initials	Date		Initials	Date
(A)			(E)			(I)	NA	NA	(M)	NA	NA
(B)			(F)			(J)	NA	NA	(N)	NA	NA
(C)			(G)			(K)	NA	NA	(O)	NA	NA
(D)			(H)	NA	NA	(L)	NA	NA	(P)	NA	NA

DW - FIGURE 09A: PIPING CLEARANCES

Rev. 7/1/2019

LOCATION OF PUBLIC WATER SYSTEM MAINS IN ACCORDANCE WITH F.A.C. RULE 62-555.314

OTHER PIPE	HORIZONTAL SEPARATION	CROSSINGS (1)	JOINT SPACING @ CROSSINGS (FULL JOINT CENTERED)
STORM SEWER, STORMWATER FORCE MAIN, RECLAIMED WATER (2)	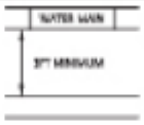	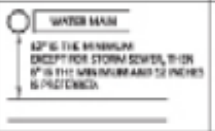	
VACUUM SANITARY SEWER	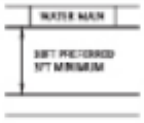	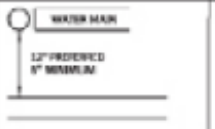	
GRAVITY OR PRESSURE SANITARY SEWER, SANITARY SEWER FORCE MAIN, RECLAIMED WATER (4)	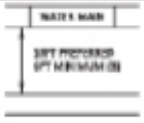	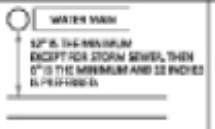	
ON-SITE SEWAGE TREATMENT & DISPOSAL SYSTEM	10FT MINIMUM	—	—

(1) WATER MAIN SHOULD CROSS ABOVE THE OTHER PIPE. WHEN WATER MAIN MUST BE BELOW OTHER PIPE, THE MINIMUM SEPARATION IS 12 INCHES.
(2) RECLAIMED WATER REGULATED UNDER PART III OF CHAPTER 62-610, F.A.C.
(3) 3FT FOR GRAVITY SANITARY SEWER WHERE THE BOTTOM OF THE WATER MAIN IS LAID AT LEAST 6 INCHES ABOVE THE TOP OF THE GRAVITY SANITARY SEWER.
(4) RECLAIMED WATER IS REGULATED UNDER PART III OF CHAPTER 62-610, F.A.C.

NOTES:
(A) 1. PLACEHOLDER FOR FUTURE NOTES.

VERIFICATION AREA - PLEASE COMPLETE AND SUBMIT TO UCF UES PRIOR TO 100% CONSTRUCTION DOCUMENTS

	Initials	Date		Initials	Date		Initials	Date		Initials	Date
(A)	NA	NA	(E)	NA	NA	(I)	NA	NA	(M)	NA	NA
(B)	NA	NA	(F)	NA	NA	(J)	NA	NA	(N)	NA	NA
(C)	NA	NA	(G)	NA	NA	(K)	NA	NA	(O)	NA	NA
(D)	NA	NA	(H)	NA	NA	(L)	NA	NA	(P)	NA	NA

DW - FIGURE 09B: PIPING CLEARANCES

Rev. 7/1/2019

LOCATION OF PUBLIC WATER SYSTEM MAINS IN ACCORDANCE WITH F.A.C. RULE 62-555.314

FDEP SEPARATION REQUIREMENTS UNDER 62-555.314, EFFECTIVE 8-28-2003

HAZARD	HORIZONTAL SEPARATION	VERTICAL SEPARATION	
		WATER ABOVE	WATER BELOW
STORM SEWER	3FT MIN.	12" PREF., 6" MIN.	12" MIN.
STORM FORCE MAIN	3FT MIN.	12" MIN.	12" MIN.
RECLAIMED WATER (REQ'D UNDER 62-610)	3FT MIN.	12" MIN.	12" MIN.
RECLAIMED WATER (NOT UNDER 62-610)	10FT PREF., 6FT MIN.	12" MIN.	12" MIN.
VACUUM SANITARY SEWER	10FT PREF., 3FT MIN.	12" PREF., 6" MIN.	12" MIN.
GRAVITY SANITARY SEWER	10FT PREF., 6FT MIN.	12" PREF., 6" MIN.	12" MIN.
SANITARY SEWER FORCE MAIN	10FT PREF., 6FT MIN.	12" MIN.	12" MIN.
ON-SITE SEWAGE TREATMENT & DISPOSAL SYSTEM	10FT MIN.	NONE	NONE

*3FT MINIMUM IF BOTTOM OF WATER MAIN IS 6" ABOVE THE GRAVITY SEWER MAIN

HAZARD	ALTERNATIVE JOINT SPACING
STORM SEWER	3FT MIN.
STORM FORCE MAIN	3FT MIN.
RECLAIMED WATER (REQ'D UNDER 62-610)	3FT MIN.
RECLAIMED WATER (NOT UNDER 62-610)	6FT MIN.
VACUUM SANITARY SEWER	3FT MIN.
GRAVITY SANITARY SEWER	6FT MIN.
SANITARY SEWER FORCE MAIN	6FT MIN.
ON-SITE SEWAGE TREATMENT & DISPOSAL SYSTEM	N/A

NOTES:
1. THESE TABLES ARE NOT COMPREHENSIVE AND ARE NOT A SUBSTITUTE FOR THE TEXT IN 62-555.314.
2. THIS DOCUMENT WAS CREATED BY A PRIVATE INDIVIDUAL AND IS NOT AN OFFICIAL FDEP DOCUMENT.
3. ALL DISTANCES ARE MEASURED OUTSIDE TO OUTSIDE.
4. IT IS PREFERABLE TO LAY THE WATER PIPE ABOVE THE HAZARD PIPE.
5. WATER MAINS CANNOT COME INTO CONTACT WITH ANY HAZARD STRUCTURES WITHOUT PRIOR APPROVAL BY UES.
6. EXCEPTIONS ARE ONLY ALLOWED ON A CASE-BY-BASE BASIS WITH JUSTIFICATION TO UES BEFORE INSTALLATION.
7. AT CROSSINGS, CENTER WATER PIPE ON CROSSING OR MAINTAIN THE FOLLOWING JOINT SPACING.

VERIFICATION AREA - PLEASE COMPLETE AND SUBMIT TO UCF UES PRIOR TO 100% CONSTRUCTION DOCUMENTS

	Initials	Date		Initials	Date		Initials	Date		Initials	Date
(A)	NA	NA	(E)	NA	NA	(I)	NA	NA	(M)	NA	NA
(B)	NA	NA	(F)	NA	NA	(J)	NA	NA	(N)	NA	NA
(C)	NA	NA	(G)	NA	NA	(K)	NA	NA	(O)	NA	NA
(D)	NA	NA	(H)	NA	NA	(L)	NA	NA	(P)	NA	NA

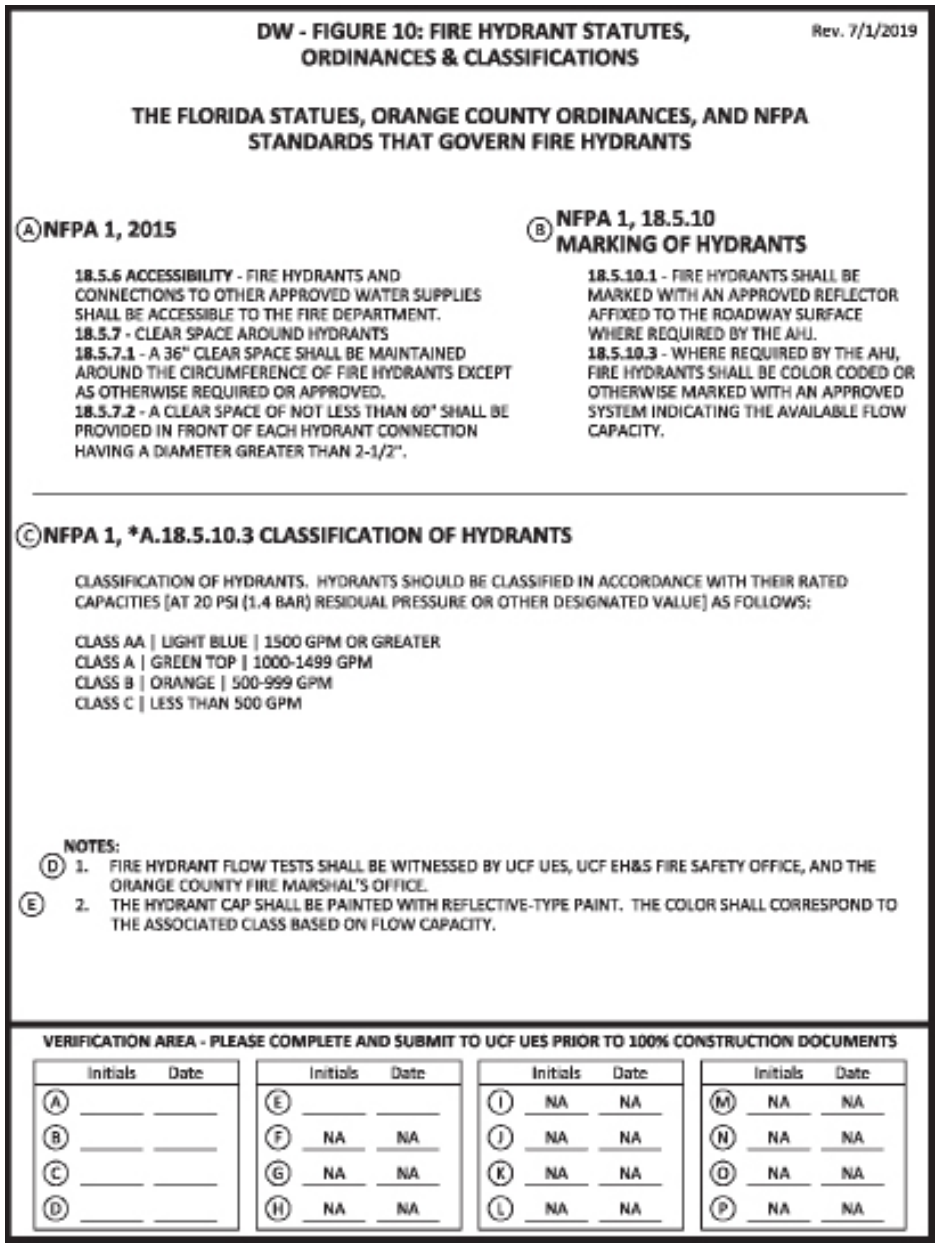

DW - FIGURE 10: FIRE HYDRANT STATUTES, ORDINANCES & CLASSIFICATIONS Rev. 7/1/2019

THE FLORIDA STATUES, ORANGE COUNTY ORDINANCES, AND NFPA STANDARDS THAT GOVERN FIRE HYDRANTS

(A) NFPA 1, 2015

18.5.6 ACCESSIBILITY - FIRE HYDRANTS AND CONNECTIONS TO OTHER APPROVED WATER SUPPLIES SHALL BE ACCESSIBLE TO THE FIRE DEPARTMENT.
18.5.7 - CLEAR SPACE AROUND HYDRANTS
18.5.7.1 - A 36" CLEAR SPACE SHALL BE MAINTAINED AROUND THE CIRCUMFERENCE OF FIRE HYDRANTS EXCEPT AS OTHERWISE REQUIRED OR APPROVED.
18.5.7.2 - A CLEAR SPACE OF NOT LESS THAN 60" SHALL BE PROVIDED IN FRONT OF EACH HYDRANT CONNECTION HAVING A DIAMETER GREATER THAN 2-1/2".

(B) NFPA 1, 18.5.10 MARKING OF HYDRANTS

18.5.10.1 - FIRE HYDRANTS SHALL BE MARKED WITH AN APPROVED REFLECTOR AFFIXED TO THE ROADWAY SURFACE WHERE REQUIRED BY THE AHJ.
18.5.10.3 - WHERE REQUIRED BY THE AHJ, FIRE HYDRANTS SHALL BE COLOR CODED OR OTHERWISE MARKED WITH AN APPROVED SYSTEM INDICATING THE AVAILABLE FLOW CAPACITY.

(C) NFPA 1, *A.18.5.10.3 CLASSIFICATION OF HYDRANTS

CLASSIFICATION OF HYDRANTS. HYDRANTS SHOULD BE CLASSIFIED IN ACCORDANCE WITH THEIR RATED CAPACITIES [AT 20 PSI (1.4 BAR) RESIDUAL PRESSURE OR OTHER DESIGNATED VALUE] AS FOLLOWS:

CLASS AA | LIGHT BLUE | 1500 GPM OR GREATER
CLASS A | GREEN TOP | 1000-1499 GPM
CLASS B | ORANGE | 500-999 GPM
CLASS C | LESS THAN 500 GPM

NOTES:
(D) 1. FIRE HYDRANT FLOW TESTS SHALL BE WITNESSED BY UCF UES, UCF EH&S FIRE SAFETY OFFICE, AND THE ORANGE COUNTY FIRE MARSHAL'S OFFICE.
(E) 2. THE HYDRANT CAP SHALL BE PAINTED WITH REFLECTIVE-TYPE PAINT. THE COLOR SHALL CORRESPOND TO THE ASSOCIATED CLASS BASED ON FLOW CAPACITY.

VERIFICATION AREA - PLEASE COMPLETE AND SUBMIT TO UCF UES PRIOR TO 100% CONSTRUCTION DOCUMENTS

	Initials	Date
(A)		
(B)		
(C)		
(D)		

	Initials	Date
(E)		
(F)	NA	NA
(G)	NA	NA
(H)	NA	NA

	Initials	Date
(I)	NA	NA
(J)	NA	NA
(K)	NA	NA
(L)	NA	NA

	Initials	Date
(M)	NA	NA
(N)	NA	NA
(O)	NA	NA
(P)	NA	NA

Natural Gas Pipeline, Regulator, and Meter Installation Requirements

GENERAL INFORMATION

1. UES manages natural gas services throughout the UCF Main Campus. These Standards are intended to identify any items that must exceed industry and/or code-required minimums. (Nat Gas Meter Manual)
2. System Type and Maximum Allowable Operating Pressure:
   - The UCF Main Campus has a natural gas Institutional User system (UCF Houseline System) comprising approximately 23,360 linear feet of carbon steel and polyethylene pipe from 6" - 3/4" in diameter.
   - The UCF Houseline system comprises four individual systems or feeds: North, South, West, and Ara. Each individual system has its own single feed from TECO Peoples Gas.
   - The feed from TECO Peoples Gas does not exceed 125 psig. Accordingly, all UCF Houseline System components should be designed for a maximum allowable operating pressure ("MAOP") of at least 125 psig.
   - Most of the UCF Houseline System's pipeline and manual valves are buried. Typically, the only facilities above grade are the measurement and regulation portions of the system.
3. Repairs, replacements, new construction, or additions to this system should comply with the requirements of the Code of Federal Regulations 49 CFR Part 192 and Florida Public Service Commission Rule 25-12, along with other applicable or incorporated standards.
4. For ease of use, this section of the construction standards includes multiple 8.5"x11" details or Figures. These details are used to convey critical information to the designer, track the designer's progress, and verify the contractor's installation. These details or Figures are provided in the

table below and are intended to be incorporated into the construction documents by the designer, after a detailed review for code and design-intent requirements.

ALL Projects	As Applicable
Natural Gas - Figure 00, 01	Natural Gas - Figure 02,03,04, 05, 06, 07

TYPICAL REQUIREMENTS

1. The Natural Gas Service and Metering Responsibility Table (Figure 01 below) identifies the parties responsible for designing, providing, installing, terminating, and verifying the metering equipment.
2. Pipe – Carbon Steel
   - All carbon steel pipelines, to be installed as part of the UCF Houseline System, are to be designed to a MAOP of 125 psig. API 5L Grade B pipe should be used for all carbon steel pipe. The following table provides minimum wall thickness to achieve the 125 psig MAOP based upon 49 CFR Part 192.

Nominal Pipe Size (Inches)	Outside Diameter (Inches)	Minimum Wall Thickness	Standard Wall Thickness
2	*Note 1	*Note 1	*Note 1
3	3 ½	0.013	0.216
4	4 ½	0.016	0.237
6	6 5/8	0.024	0.280

Note 1 - Coordinate requirements with UES

   - The standard wall API 5L Grade B pipe will be sufficient for any size to be installed in the UCF Houseline System.
   - Installation – Below Grade
     - Installation will conform to the UCF Houseline System Operations and Maintenance Manual.
   - Installation – Above Grade
     - Placeholder for future items.
   - Cathodic Protection:
     - A galvanic cathodic protection (CP) system is installed on the UCF Houseline System to provide corrosion protection in accordance with 49 CFR 192.463 in the event of a holiday in the coating.
     - The following materials are to be used in the installation and repair of the cathodic protection system:
       - Sacrificial Magnesium Anodes – Sacrificial magnesium anodes Mesa Products H-1 cast magnesium anodes.
       - CP Wire - #12 AWG stranded copper with HMWPE insulation
       - Test Station – Cott Big Fink test station for above grade application and Street Fink for flush to grade applications. See Figure 08 below for details.
3. Pipeline Valves: Any new service line or branch added to existing mains or downstream branches must use in-line connections (no top-mount service taps) for a continuous pipe flow. Such connections **must include an isolation valve immediately after the tap/connection point** for the new service line or branch. A curb box must be installed and set at ground level (no elevated or below-grade caps). Contact UES for directions.
4. Curb Boxes:
   - All curb boxes set in street or sidewalk hardscaping must be flush and level to surrounding surface.
   - All valve box lids must be clean and free of any debris or restrictive material for ease of access to the valve at all times (no locking or hex-nut valves unless specifically requested or approved by UES).
   - All valves must be clearly centered and visible from valve box opening.

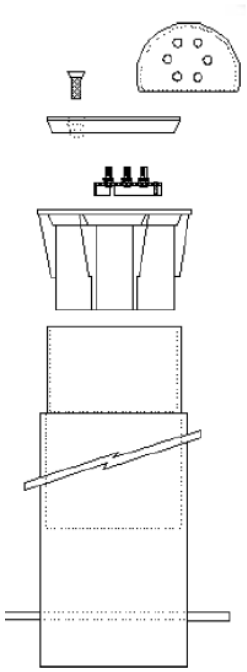

Street Fink Test Station

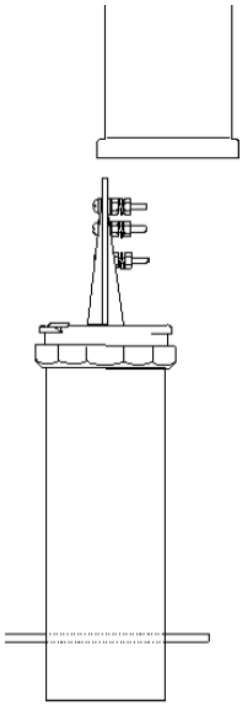

Big Fink Test Station

5. Regulators:
   - To simplify maintenance and inventory, install Fisher or Elster American Regulators in the UCF Houseline System.
   - Utility-owned regulation (distribution side of the meter) must follow a two-stage setup with a high-pressure regulator following the main shutoff valve off the service riser, immediately followed by a medium-pressure service regulator set for the metered/delivered pressure.
   - All regulators after the meter are not specified by, nor provided by, UES. Regulators downstream of the meter (customer-side) are the responsibility of **UCF Facilities Operations**.
   - Regulators ahead of the meter are operated and set only by UES or its designated contractor.
   - Any requests for an increase in delivered pressure from the meter must be communicated to UES.
   - Any regulators installed after the meter are operable and set by the contractor or final customer per direction of Facilities Operations.
   - A customer-side shutoff valve must be installed immediately downstream of the meter for use and servicing by the customer.
   - Two-Stage Regulation (Diaphragm Metering, < 2 psi Delivered/Metered)
     - 1st Stage/HP Field Regulator
       - 1” Fisher 627R or approved equal
       - D.I. Body, 1000#
       - Nitrile Valve Disk
       - SS Seat Ring & Disk Holder
       - Green Spring, 40# Set Point
       - 3/16” Orifice
       - FNPT Ends
     - 2nd Stage/LP Service Regulator (downstream of 1st Stage regulator)
       - 1” American 1813-C or approved equal
       - 1/8” x 3/16” Orifice
       - STD, TRIM, I.R.V.
       - Spring Selection (Delivered Pressure)
         - Purple Spring (#70017P042) @ 6” – 15” WC or approved equal
           - FNPT Ends
           - 60# Max, Inlet
         - Purple Spring (#70017P049) @ 2 psi or approved equal
           - FNPT Ends
         - 100# Max, Inlet
   - Two Stage Regulation (Rotary Metering, 3.5”WC – 5 PSI Delivered/Metered)
     - 1st Stage/HP Field Regulator

- 1” Fisher 627R or approved equal
- D.I. Body, 1000#
- Nitrile Valve Disk
- SS Seat Ring & Disk Holder
- Green Spring, 40# Set Point
- 3/16” Orifice
- FNPT Ends

○ 2nd Stage/LP Service Regulator (downstream of 1st Stage regulator)

- 1” American 1813-B or approved equal
- STD, TRIM, Full Capacity Internal Relief
- Spring Selection (Delivered Pressure)
  - Orange Spring or approved equal (#71424P018) @ 5.5” - 8” WC
  - Yellow Spring or approved equal (#71424P019) @ 8.5” – 14”WC
  - Green Spring or approved equal (#71424P020) @ 14.5” – 28” WC
  - Blue Spring or approved equal (#71424P021) @ 1 psi – 2 psi
  - > 2 psi , See Manufacturer Specifications
- FNPT Ends

6. Protection & Concrete Pad Requirements
   - Bollards
     - Concrete bollards must be installed at least two feet out from any above-ground gas piping, protecting the piping at all angles.
     - Bollards must be **at least three feet** in height above finished ground surface.
     - Bollards must be minimum 6” diameter, painted yellow (Product# V7400 System, Rust-Oleum, Safety Yellow) or approved equal
     - Bollards must be set within the concrete pad footing under the meter set and above ground piping from riser to customer entrance or return underground.
     - Bollard placement must be reviewed and approved by UES.
   - Concrete Pads
     - 3000 psi concrete pads must be installed under any above ground gas piping.
     - **Bollards protecting piping and metering must be set within the pad.**
     - Piping from riser or houseline that penetrates the ground must be sleeved, within the concrete pad.
     - Adjustable supports must be placed under rotary meter sets or extended runs of above ground piping to support the bypass set and regulation, reducing wear on joints and unions which could result in leaks.
   - Support
     - All above-ground piping must be secured with wall brackets to isolate and reduce flex/movement of larger meter sets and piping.
     - There shall be no metal-to-metal contact between the gas piping and bracket supports to reduce corrosion and wear. A padded rubber or synthetic pad must be placed around the area being secured, separating the pipe from the physical bracket.
     - There shall be no metal to concrete contact. Where piping or metal bollards penetrate concrete, they shall be sleeved with PVC to prevent metal to concrete contact.

- There shall be no bracket supports under gas meter assemblies. Gas meters shall be supported from only piping to allow ease of removal and installation.
- **All slugs/coupons resulting from a hot-tap of any kind must be retrieved and provided to UES for inspection. Coupons must include the date, contractor name, and project name.**

7. UES must witness all hot taps.
8. Pressure Testing:
   - All pipeline repairs or construction requiring installation of a new service line will require pressure testing as follows:
     - Each segment of a service line **(other than plastic)** must be leak tested in accordance with 49 CFR 192.511 before being placed in service. If feasible, the service line connection to the main must be included in the test; if not feasible, it must be given a leakage test at the operating pressure when placed in service. (Nat Gas Meter Manual)
     - Each segment of a service line **(other than plastic)** intended to be operated at a pressure of at least 1 psi gage but not more than 40 psi gage must be given a leak test at a pressure of not less than **50 psi gauge**.
     - Each segment of a service line **(other than plastic)** that is intended to be operated at pressures of more than **40 psi gauge** must be tested to at least **200 psi gauge** in accordance with §192.507 of this subpart. **Hot tap connections shall be tested from the connection to the valve for a minimum of 1-hour. Segments from the valve downstream shall be tested for a minimum of 24-hours.**
     - **When conducting this test, there must be a means to monitor pressure throughout the duration of the test.**
9. X-Rays: 100% at valves and 20% of inline piping, above and below ground. Results shall be documented and submitted to UES via the UCF Project Manager.

METERING

1. Depending on customer load requirements, either Elster-American diaphragm meters or Dresser/Roots rotary meters or approved equal are to be installed.
2. UES will specify and provide all metering and upstream utility-side regulators for the project.
3. UES will size all metering and coordinate installation of metering, upstream utility-side regulators, and industrial bypass sets using a UES approved contractor. Such work will be performed in accordance with manufacturer's requirements and directed by UES.
4. All meters must have a direct read index. Dial faced registers are not permitted.
5. All meter indexes must be "standard" pressure indexes. Pressure-compensating indexes are prohibited.
6. All meters must have an Itron 100G DLN 900mhz transmitter (programmed by UES) to link to the existing fixed network data collection system.
7. All diaphragm meters must have a Pete's plug for drop testing.
8. All rotary meters must be outfitted with Pete's plugs on the inlet and outlet side of the meter base for differential pressure testing and drop testing.
9. All meters must have a bypass to service equipment.
10. When practical, no building or facility should have more than one service line or more than one meter location.
11. All services to a building or facility shall serve directly from

a connection to a service main, and not downstream of another existing meter/service.

12. A meter must be installed at each building using gas service.
13. Each generator must be directly fed from a main distribution line and must be metered.
14. Diaphragm Meters
    - All diaphragm meters must be purchased with a size 45LT (1-1/2") threaded female connection, top mount only.
    - All gas meter connections must use insulated swivels (spuds) on both the inlet and outlet side of the meter
    - All diaphragm meters, small or large, must include a bypass to service the meter.
    - All diaphragm meters must be mounted with a minimum of 12" of space between the bottom of the meter and the finished surface below.
    - At no point should any meters make direct contact with soil, metal bracketing, or other supports.
15. Rotary Meters
    - All industrial rotary meter sets must be welded seamless steel pipe rated at 150 psi or greater.
    - Rotary meter sets must have threaded pipe cap ends for in-service testing.
    - Rotary meter sets must have an in-line strainer with valve/plug for blowdown cleaning or an inline filter.
    - Rotary meter sets must have flange connections at the meter, sized to standard meter width (typical 6-3/4" or 9-1/2" based on meter size and load requirements).
    - The entire meter sets must be welded with no union or threaded connections, with the exception of inlet/outlet and test cap ends.
    - Rotary meter sets must be coated with a two-part epoxy primary and painted with a urethane top coating.
    - All rotary meter sets must be mounted in an industrial bypass meter set with a minimum of 12" of space between the bottom of the rotary meter and the finished surface below.
    - At no point should any meters make direct contact with soil, metal bracketing, or other supports.
16. Meter Badges
    - All meters must have a clearly visible badge identifying at minimum:
        - Meter Manufacturer
        - MAOP (Maximum Allowable Operating Pressure)
        - Model Number
        - Serial Number
        - ANSI Class rating
17. Risers: Consistent with underground pipe material and size. Main riser shutoff valve to TECO standards.
18. Main Service Shutoff Valve/Riser
    - All service shutoff valves must be installed at least 12" above finished ground level.
    - All service shutoff valves must be rated at 150 psi or greater
19. A plastic PVC sleeve shall surround the riser for protection, be 2' ft minimum in length, and be set to a height of 6" from the bottom of the main shutoff valve.

PLAN REVIEW AND COORDINATION WITH UCF UES

1. Coordination of service and metering requirements with UES is important for the success of the project. If any specific questions exist, they shall be submitted to UES, through the UCF Project Manager, as soon as possible.
2. At the **50% Construction Document Phase**, the following

shall be shown on plans and reviewed with UCF UES:

- Location of existing UCF Houseline system
- Proposed point of connection to UCF's House line and routing of service line to the building
- Proposed location of all meters, regulators and isolation valves
- Proposed pressure and volume requirements for new service line and building connection
- All included Figures identified by UCF for the service type. Designer shall submit the Figures through the UCF project manager and identify any aspects of the Figure that cannot or will not be provided.

3. At the **100% Construction Document Phase**, the following shall be shown on plans and reviewed with UES:
   - Location of existing UCF Houseline system
   - Point of connection to UCF's Houseline, as agreed upon with UCF UES and UCF project manager
   - Routing of service line to the building, as agreed upon with UCF UES and UCF project manager
   - Final pipe material and sizes
   - All pipeline marker locations
   - All valve locations
   - All pipeline coating requirements
   - All cathodic protection locations
   - All meters, regulators and isolation valves locations
4. Project Turnover
   - **UES Requirements for project completion and turnover:**
     - **Complete set of 100% As-Builts with offsets, depth, pictures, X-rays (NLT 10 business days after installation)**
     - GPS/GIS Documentation
       - Exposed piping may not be backfilled until approved by UES. Coordination is required as UES captures GPS points and adds marker balls, takes pictures and measurements, and visually inspects the piping before it is covered.

NATURAL GAS - FIGURE 00: GENERAL NOTES RELATED TO NATURAL GAS SERVICE & METERING

Rev. 10/30/2017

1. REFER TO RESPONSIBILITY TABLE FOR PARTY DESIGNING, PROVIDING, INSTALLING, TERMINATING AND VERIFYING COMPONENTS.
(A) 2. ALL PIPELINES SHALL BE BURIED TO THE GREATEST EXTENT POSSIBLE. MINIMUM COVER FOR THE BURIED PIPELINES SHALL BE 36-INCHES TO THE TOP OF THE PIPE.
(B) 3. ALL BURIED PIPELINES SHALL BE INSTALLED WITH CAUTION TAPE A MINIMUM OF 12-INCHES ABOVE THE PIPELINE TO WARN EXCAVATORS OF THE LOCATION OF THE BURIED PIPELINE.
(C) 4. ALL BURIED STEEL PIPE SHALL BE FACTORY COATED WITH 14-16 MILS OF FUSION BONDED EPOXY ("FBE") COATING.
(D) 5. WELDED JOINTS SHALL BE COATED WITH AN EPOXY COATING SYSTEM SUCH AS DENSO'S PROTAL 7200 OR EQUIVALENT.
(E) 6. ABOVE GRADE STEEL PIPELINE SHALL BE SANDBLASTED TO A NEAR WHITE CONDITIONED AND COATED WITH A TWO-PART EPOXY COATING WITH A TOPCOAT OF POLYURETHANE.
(F) 7. ALL ABOVE GROUND PIPING AND REGULATION MUST BE PRIMED AND PAINTED WITH UCF UES REQUIRED PAINT (PRODUCT #V7400 SYSTEM, RUST-OLEUM, SAFETY YELLOW ONLY OR APPROVED EQUAL).
(G) 8. ALL VALVES SHALL BE RATED ANSI 150.
(H) 9. ANY VALVE INSTALLED BELOW GRADE SHALL BE A WELDED END VALVE.
(I) 10. MAIN LINE ISOLATION VALVES SHALL BE KEROTEST 1/4-TURN WELDBALL FULL OR REDUCED PORT GAS DISTRIBUTION VALVES OR APPROVED EQUAL.
(J) 11. ALL REPAIRS AND NEW CONSTRUCTION SHALL BE PRESSURE TESTED FOR LEAKS. PRESSURE TESTING SHALL BE WITNESSED BY UCF UES.
(K) 12. ALL WORK ON THE GAS SYSTEM SHALL BE DOCUMENTED ON A "SERVICE INSTALLATION RECORD" FROM THE APPROPRIATE UTILITY PROVIDER. THIS RECORD SHALL BE PROVIDED TO UCF UES.
(L) 13. ALL UTILITIES, VALVES, FITTINGS, PIPES WILL HAVE X, Y AND Z GPS COORDINATES TAKEN AND ATTACHED TO THE AS-BUILTS AS WELL AS PROVIDED IN ELECTRONIC FORMAT AS SPECIFIED BY THE UCF UES GIS MANAGER.
(M) 14. NATURAL GAS CONNECTIONS SHALL NOT BE OPENED BY UCF UES UNTIL A SCANNED COPY OF THE AS-BUILT DOCUMENTS HAVE BEEN SUBMITTED AND APPROVED BY UCF UES.
(N) 15. DIFFERENT UTILITIES SHALL NOT BE STACKED WITHIN THE SAME TRENCH.

VERIFICATION AREA - PLEASE COMPLETE AND SUBMIT TO UCF UES PRIOR TO 100% CD RELEASE

	Initials	Date
(A)		
(B)		
(C)		
(D)		
(E)		

	Initials	Date
(F)		
(G)		
(H)		
(I)		
(J)		

	Initials	Date
(K)		
(L)		
(M)		
(N)		
(O)	NA	NA

	Initials	Date
(P)	NA	NA
(Q)	NA	NA
(R)	NA	NA
(S)	NA	NA
(T)	NA	NA

NATURAL GAS - FIGURE 01: NATURAL GAS SERVICE AND METERING RESPONSIBILITY TABLE

Rev. 6/07/2017

RESPONSIBILITY TABLE

COMPONENT	DESIGN BY (NOTE 1)	PROVIDED BY	INSTALLED BY	TERMINATED BY	VERIFIED BY
GAS METER, RF TRANSMITTER & WIRING BETWEEN DEVICES	SIZE/QTY - UCF LOCATION - EOR, UCF UES	UCF UES	CONTRACTOR	CONTRACTOR - NOTE 2	EOR & UCF UES
PRESSURE REGULATORS BEFORE METER	SIZE/QTY - UCF LOCATION - EOR, UCF UES	UCF UES	CONTRACTOR - NOTE 3	--	EOR & UCF UES
PRESSURE REGULATORS AFTER METER	EOR, UCF UES	CONTRACTOR	CONTRACTOR	--	EOR
ALL OTHER COMPONENTS AND PIPING, INCLUDING CUSTOMER VALVE	EOR, UCF UES	CONTRACTOR	CONTRACTOR	CONTRACTOR	EOR & UCF UES
MARKER BALLS	UCF UES	UCF UES - NOTE 5	UCF UES - NOTE 4	--	UCF UES
VALVE/CURB BOXES	EOR, UCF UES	UCF UES	CONTRACTOR	--	UCF UES

NOTES:
1. WHEN REQUIREMENTS ARE PROVIDED BY UCF UES, THEY SHALL BE CONSIDERED REQUESTS IN ADDITION TO CODE REQUIRED MINIMUMS. ENGINEER OF RECORD (EOR) SHALL REVIEW, CONFIRM APPLICABILITY OF REQUESTS AND INCORPORATE THESE ITEMS INTO THE PROJECT DOCUMENTS AS APPLICABLE.
2. TERMINATION INCLUDES INSTALLATION OF COMPONENTS AND PROPER TERMINATION OF WIRING BETWEEN COMPONENTS.
3. PRESSURES WILL BE SET AND ADJUSTED BY UCF UES ONLY.
4. MARKER BALLS SHALL BE INSTALLED BY UCF UES EVERY 50 FEET ALONG GAS LINE. COORDINATE WITH UCF PRIOR TO BACKFILLING ANY NEW OR EXISTING GAS LINE.
5. MARKERS UTILIZED FOR THE PIPELINE SYSTEM SHALL BE RHINO TRIVIEW 400 WITH TEST STATION RETROFIT OR APPROVED EQUAL. COORDINATE WITH UCF UES FOR CURRENT REQUIREMENTS ON LABELING NEEDS FOR EACH SIDE OF THE TRIVIEW MARKER.

NATURAL GAS - FIGURE 02: STANDARD ROADWAY OPEN CUT DETAIL

Rev. 10/30/2017

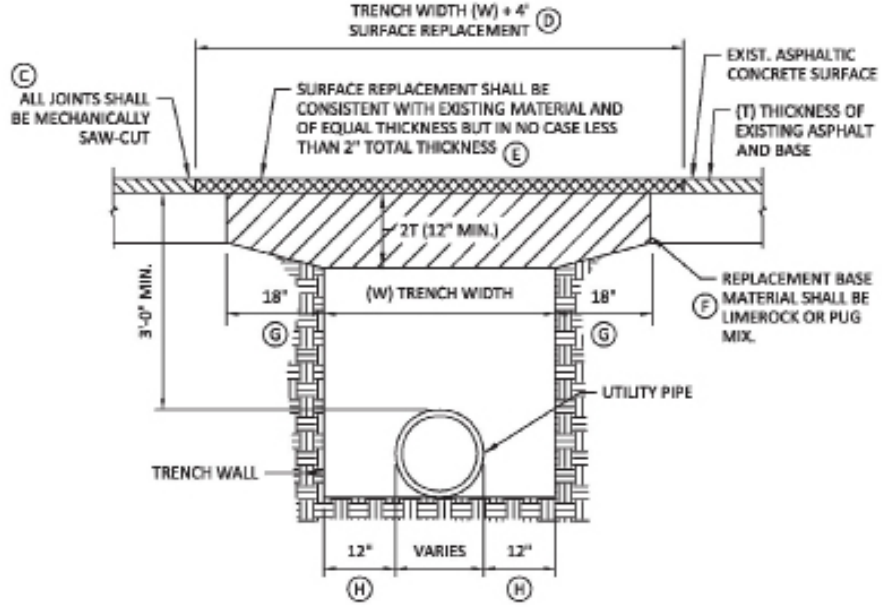

NOTES:

(A) 1. BACKFILL SHALL BE PLACED IN 6" LAYERS FROM BENEATH THE HAUNCHES OF THE PIPE TO THE BASE AND COMPACTED TO 98% DENSITY PER AASHTO T-180 MODIFIED PROCTER.

(B) 2. BASE MATERIALS SHALL BE PLACED IN TWO OR THREE LAYERS ROLLED AND TAMPED TO ABOVE SPECIFIED DENSITY.

VERIFICATION AREA - PLEASE COMPLETE AND SUBMIT TO UCF UES PRIOR TO 100% CD RELEASE

	Initials	Date		Initials	Date		Initials	Date		Initials	Date
(A)			(E)			(I)	NA	NA	(M)	NA	NA
(B)			(F)			(J)	NA	NA	(N)	NA	NA
(C)			(G)			(K)	NA	NA	(O)	NA	NA
(D)			(H)			(L)	NA	NA	(P)	NA	NA

NATURAL GAS - FIGURE 03: LOCATING WIRE TERMINAL

Rev. 10/30/2017

PLAN VIEW

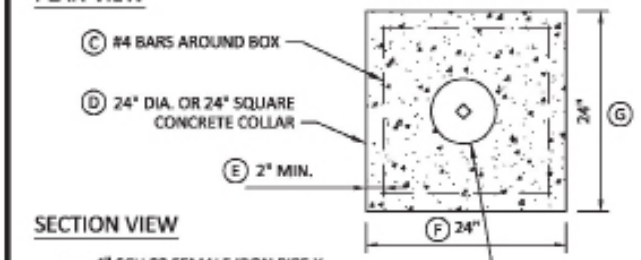

SECTION VIEW

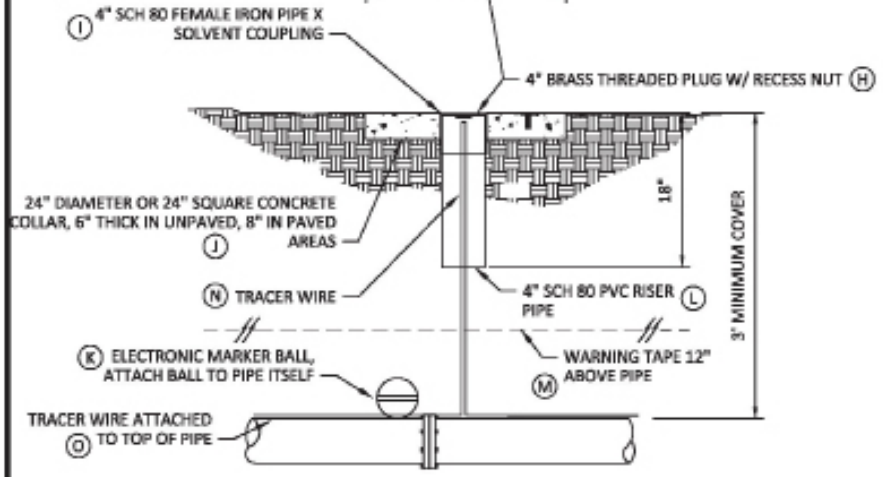

NOTES:

(A) 1. LOCATING WIRE TERMINAL SHALL BE PROVIDED ALONG BURIED UTILITY WHERE DISTANCE BETWEEN VALVE BOXES EXCEEDS 300 FEET. LOCATING WIRE TERMINAL SHALL BE PROVIDED AT 300 FOOT INTERVALS NOT GREATER THAN 300 FEET IN THESE INSTANCES.

(B) 2. LOCATOR WIRE ACCESS - 4" SCHEDULE 80 PVC, FEMALE ADAPTER COUPLING AND 4" BRASS PLUG WITH RECESSED NUT. TERMINATE INSULATED, SOLID 10 GAUGE COPPER LOCATOR WIRES AT TOP WITH 12" OF EXTRA WIRE. INSULATED WIRE SHALL BE COLOR CODED.

VERIFICATION AREA - PLEASE COMPLETE AND SUBMIT TO UCF UES PRIOR TO 100% CD RELEASE

	Initials	Date		Initials	Date		Initials	Date		Initials	Date
(A)			(F)			(K)			(P)	NA	NA
(B)			(G)			(L)			(Q)	NA	NA
(C)			(H)			(M)			(R)	NA	NA
(D)			(I)			(N)			(S)	NA	NA
(E)			(J)			(O)			(T)	NA	NA

NATURAL GAS - FIGURE 04: VALVE & VALVE BOX DETAIL

Rev. 10/30/2017

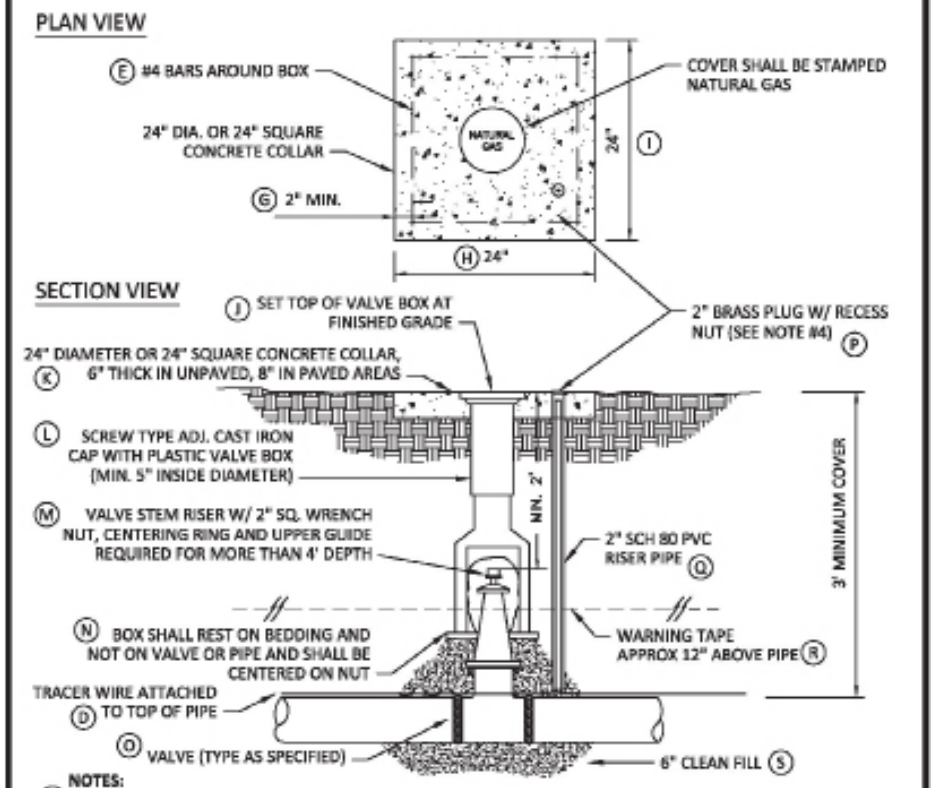

NOTES:

(A) 1. VALVES SHALL NOT BE LOCATED IN STREET CURBS.
(B) 2. VALVE COVERS SHALL BE PAINTED YELLOW.
(C) 3. LOCATOR WIRE ACCESS - 2" SCHEDULE 80 PVC, FEMALE ADAPTER COUPLING AND 2" BRASS PLUG WITH RECESSED NUT. TERMINATE INSULATED TRACER WIRES AT TOP WITH 12" OF EXTRA WIRE.

VERIFICATION AREA - PLEASE COMPLETE AND SUBMIT TO UCF UES PRIOR TO 100% CD RELEASE

	Initials	Date		Initials	Date		Initials	Date		Initials	Date
(A)			(F)			(K)			(P)		
(B)			(G)			(L)			(Q)		
(C)			(H)			(M)			(R)		
(D)			(I)			(N)			(S)		
(E)			(J)			(O)			(T)	NA	NA

NATURAL GAS - FIGURE 05: SINGLE DIAPHRAGM GAS METER DETAIL

Rev. 1/26/2017

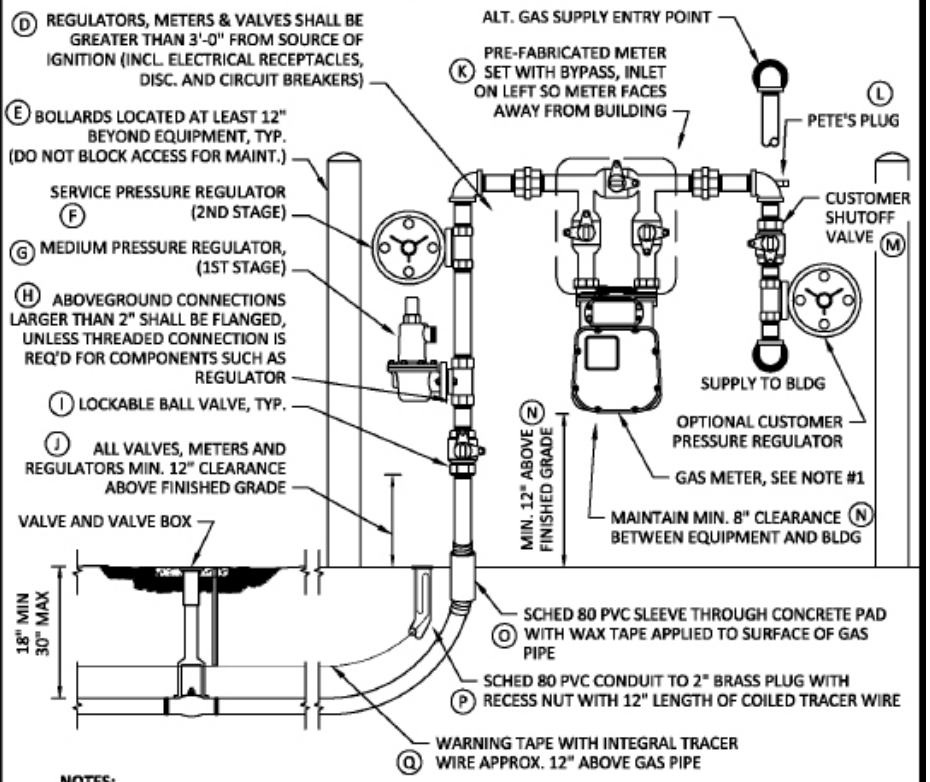

NOTES:

(A) 1. GAS METER SHALL HAVE MINIMUM 12" CLEAR SPACE TO EACH SIDE OF THE METER AND SHALL EXTEND 24" IN FRONT OF METER.
(B) 2. VALVES, METER AND REGULATORS SHALL NOT BE INSTALLED DIRECTLY ABOVE OR BELOW OPERABLE WINDOWS, WOODEN STAIRWAYS OR FIRE ESCAPES.
(C) 3. BRACING AND SUPPORTS SHALL BE PROVIDED AS NECESSARY. ALL PIPING SHALL BE SUPPORTED INDEPENDENT OF METER.

VERIFICATION AREA - PLEASE COMPLETE AND SUBMIT TO UCF UES PRIOR TO 100% CD RELEASE

	Initials	Date		Initials	Date		Initials	Date		Initials	Date
(A)			(F)			(K)			(P)		
(B)			(G)			(L)			(Q)		
(C)			(H)			(M)			(R)	NA	NA
(D)			(I)			(N)			(S)	NA	NA
(E)			(J)			(O)			(T)	NA	NA

NATURAL GAS - FIGURE 06: SINGLE ROTARY GAS METER DETAIL

Rev. 7/1/2019

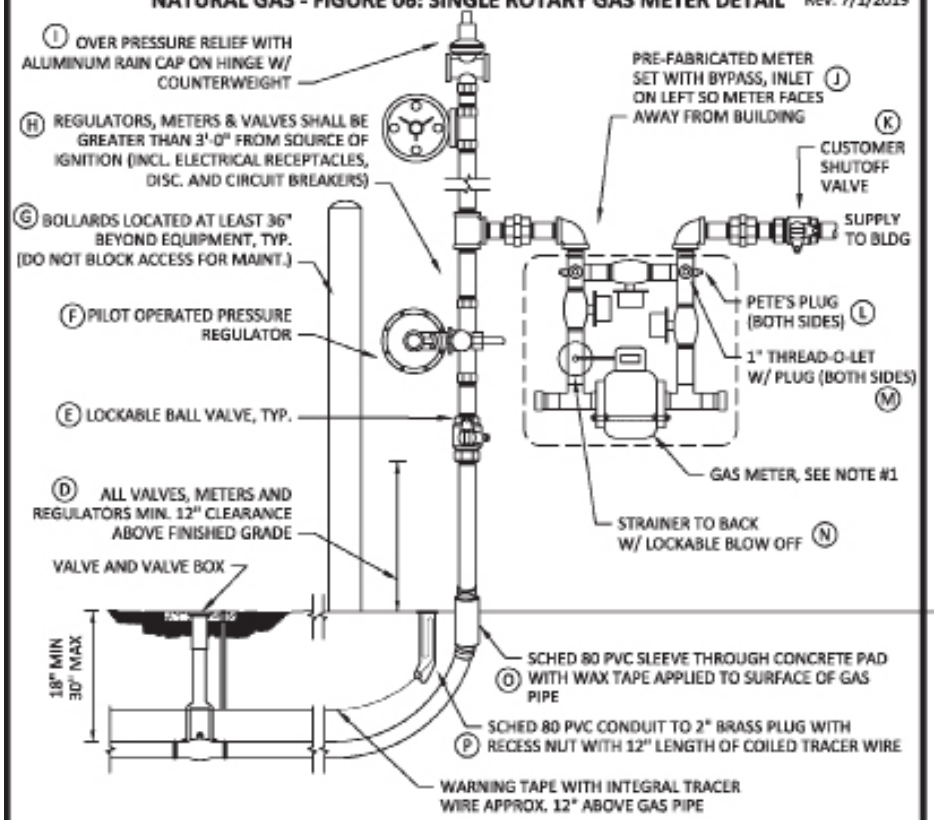

NOTES:

(A) 1. GAS METER SHALL HAVE MINIMUM 12" CLEAR SPACE TO EACH SIDE OF THE METER AND SHALL EXTEND 24" IN FRONT OF METER.

(B) 2. VALVES, METER AND REGULATORS SHALL NOT BE INSTALLED DIRECTLY ABOVE OR BELOW OPERABLE WINDOWS, WOODEN STAIRWAYS OR FIRE ESCAPES.

(C) 3. BRACING AND SUPPORTS SHALL BE PROVIDED AS NECESSARY. ALL PIPING SHALL BE SUPPORTED INDEPENDENT OF METER.

VERIFICATION AREA - PLEASE COMPLETE AND SUBMIT TO UCF UES PRIOR TO 100% CD RELEASE

	Initials	Date		Initials	Date		Initials	Date		Initials	Date
(A)			(E)			(I)			(M)		
(B)			(F)			(J)			(N)		
(C)			(G)			(K)			(O)		
(D)			(H)			(L)			(P)		

NATURAL GAS - FIGURE 07: MULTIPLE DIAPHRAGM GAS METER DETAIL

Rev. 7/1/2019

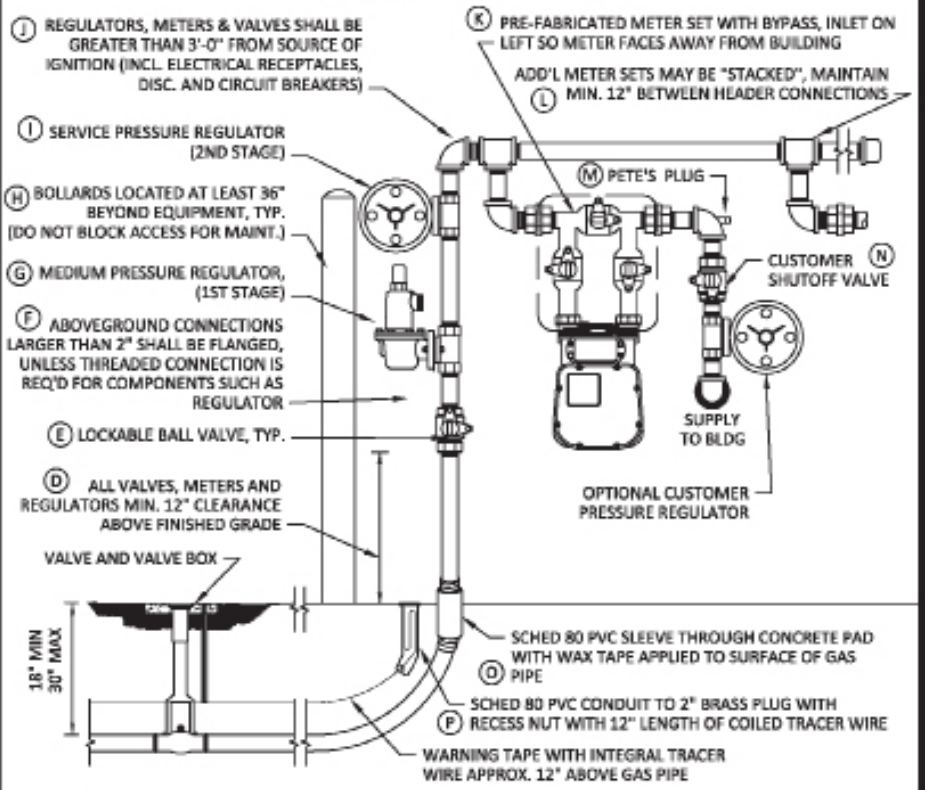

NOTES:

(A) 1. GAS METER SHALL HAVE MINIMUM 12" CLEAR SPACE TO EACH SIDE OF THE METER AND SHALL EXTEND 24" IN FRONT OF METER.

(B) 2. VALVES, METER AND REGULATORS SHALL NOT BE INSTALLED DIRECTLY ABOVE OR BELOW OPERABLE WINDOWS, WOODEN STAIRWAYS OR FIRE ESCAPES.

(C) 3. BRACING AND SUPPORTS SHALL BE PROVIDED AS NECESSARY. ALL PIPING SHALL BE SUPPORTED INDEPENDENT OF METER.

VERIFICATION AREA - PLEASE COMPLETE AND SUBMIT TO UCF UES PRIOR TO 100% CD RELEASE

	Initials	Date		Initials	Date		Initials	Date		Initials	Date
(A)			(E)			(I)			(M)		
(B)			(F)			(J)			(N)		
(C)			(G)			(K)			(O)		
(D)			(H)			(L)			(P)		

NATURAL GAS - FIGURE 08: TEST STATION DETAILS

Rev. 7/1/2019

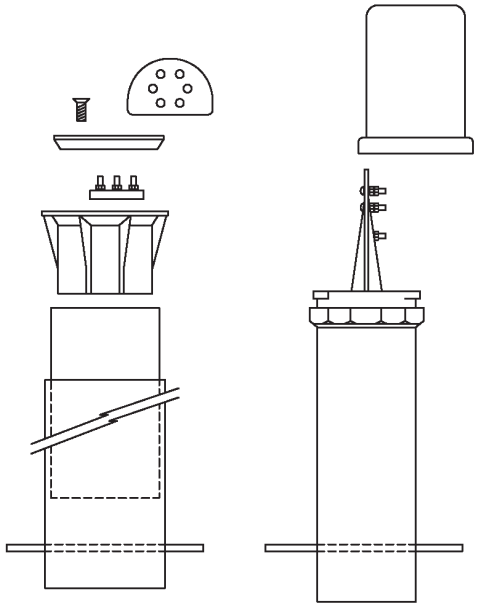

STREET FINK TEST STATION

BIG FINK TEST STATION

NOTES:
1. PLACEHOLDER FOR FUTURE NOTES.

VERIFICATION AREA - PLEASE COMPLETE AND SUBMIT TO UCF UES PRIOR TO 100% CD RELEASE

	Initials	Date		Initials	Date		Initials	Date		Initials	Date
A	NA	NA	F	NA	NA	K	NA	NA	P	NA	NA
B	NA	NA	G	NA	NA	L	NA	NA	Q	NA	NA
C	NA	NA	H	NA	NA	M	NA	NA	R	NA	NA
D	NA	NA	I	NA	NA	N	NA	NA	S	NA	NA
E	NA	NA	J	NA	NA	O	NA	NA	T	NA	NA

NATURAL GAS - FIGURE 09: GAS METER SET SEPARATIONS

Rev. 7/1/2019

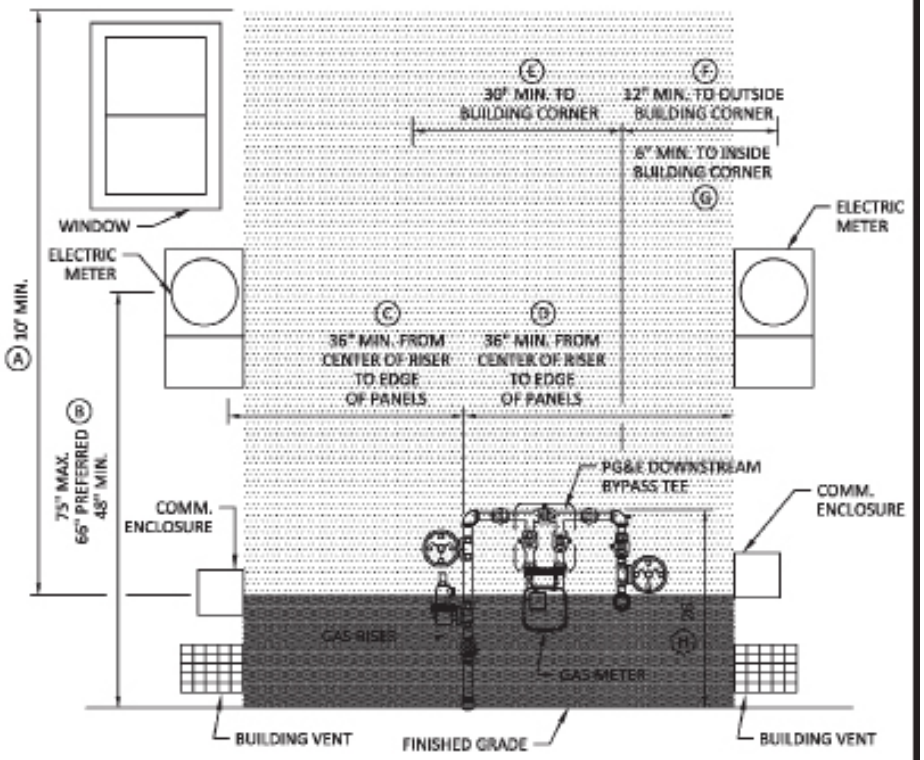

NOTES:
1. PLACEHOLDER FOR FUTURE NOTES.

VERIFICATION AREA - PLEASE COMPLETE AND SUBMIT TO UCF UES PRIOR TO 100% CD RELEASE

	Initials	Date		Initials	Date		Initials	Date		Initials	Date
A			F			K	NA	NA	P	NA	NA
B			G			L	NA	NA	Q	NA	NA
C			H			M	NA	NA	R	NA	NA
D			I	NA	NA	N	NA	NA	S	NA	NA
E			J	NA	NA	O	NA	NA	T	NA	NA

NATURAL GAS - FIGURE 10: GAS REGULATOR SET CLEARANCE FROM SOURCES OF IGNITION Rev. 7/1/2019

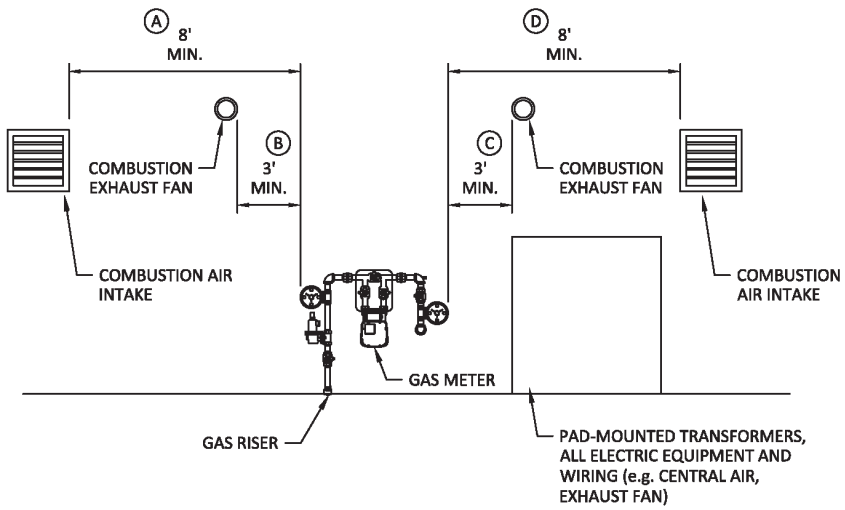

NOTES:
1. PLACEHOLDER FOR FUTURE NOTES.

VERIFICATION AREA - PLEASE COMPLETE AND SUBMIT TO UCF UES PRIOR TO 100% CD RELEASE

	Initials	Date
A		
B		
C		
D		
E	NA	NA

	Initials	Date
F	NA	NA
G	NA	NA
H	NA	NA
I	NA	NA
J	NA	NA

	Initials	Date
K	NA	NA
L	NA	NA
M	NA	NA
N	NA	NA
O	NA	NA

	Initials	Date
P	NA	NA
Q	NA	NA
R	NA	NA
S	NA	NA
T	NA	NA

Chilled Water Service and Meter Installations Requirements

GENERAL INFORMATION

1. UES maintains the campus chilled water (CHW) production and distribution system. These standards are intended to identify any items that UES finds particularly important in maintaining a consistent and reliable system. These requirements should be integrated into the project using the designer's expertise, while still meeting all code requirements.
2. Chilled water metering (BTU and flow meter) is used to calculate utility billing, savings, demand profiling, and performance monitoring for each building's CHW service entrance(s). An accurate, properly selected and installed metering system is essential to these functions. While UES will select and provide the meter, it is the designer and contractor's responsibility to install and integrate the components.
3. This information is not related to any CHW systems or sub-metering within a building.
4. If a chilled water service or application does not or cannot reflect the information in these standards, please contact UES directly for specific requirements.
5. For ease of use, this section of the construction standards provides multiple 8.5"x11" details or Figures. These details are used to convey critical information to the designer, track the designer's progress and verify the contractor's installation. These details or Figures are provided in the table below and are intended to be incorporated into the construction documents by the designer, as applicable, after confirming they meet all current code and design-intent requirements.

ALL Projects	As Applicable
CHW - Figure 00, 01, 05A OR 05B	CHW - Figure 02, 03, 04, 06, ~~07~~, 08A, 08B, 09

TYPICAL REQUIREMENTS

1. Please refer to the Chilled Water Metering Responsibility Table in the attached Figures. The table identifies the parties responsible for designing, providing, installing, terminating, and verifying the equipment.
2. All chilled water systems installed at the university main or branch campuses must adhere to this Standard.
3. All buildings, new or renovated, that are supplied with chilled water, shall be metered per these standards.

PLAN REVIEW AND COORDINATION WITH UCF UES

1. Coordination of chilled water service and metering requirements with UES is important for the success of the project.
2. At the 50% Construction Document Phase the following shall be shown on plans and reviewed with UES:
    - Proposed routing of CHW service from campus distribution loop to the building for approval
    - Proposed location of meter
    - Proposed metering configuration
    - Proposed heat rejection rates into the CHW system, CHW supply temperature, CHW return temperature volume and pipe size
    - All included Figures identified by UCF for the service type. Designer shall identify any aspects of the Figure that cannot or will not be provided.
    - All requested Figures shall be submitted to UCF UES, through UCF's project manager.
3. At the 100% Construction Document Phase, the following shall be shown on plans and reviewed with UCF UES:
    - Final approved routing of CHW service from campus distribution loop to the building
    - Final location of BTU and flow meter(s), including horizontal and vertical clearances
    - Final heat rejection rates into the CHW system, CHW supply temperature, CHW return temperature volume and pipe size
    - The design professional shall provide the hydralic model to UES prior to interconnecting, demonstrating no adverse distribution impacts.
    - Proposed point of connection and integration of the BTU meter to the building level and campus level DDC system
    - Proposed source of power for BTU and flow meter. This includes the panel name, circuit number, circuit breaker size and location of electrical panel on the floor plans
    - All included Figures identified by UCF for the service type. Designer shall identify any aspects of the Figure that cannot or will not be provided.

    All requested Figures shall be submitted to UES through the UCF Project Manager.
4. The design professional shall provide the hydralic model to UES prior to interconnecting, demonstrating no adverse distribution impacts.

HANDLING

1. Pipe, fittings, valves, and other accessories shall be handled in such a manner as to ensure delivery to the job site in sound, undamaged condition.
2. Special care shall be taken to avoid injury to coatings and linings on pipe and fittings. The Contractor shall repair damaged coatings and linings to the satisfaction of the UES CHW Representative. Any scratch or gouge greater than 10% of the wall thickness will be considered significant and can be rejected unless determined acceptable by the UES CHW Representative or Engineer of Record.
3. Pipe, tubing and fittings shall be homogenous throughout, and free of visible cracks, holes, foreign inclusions, blisters,

dents or other injurious defects. The pipe, tubing and fittings shall be as uniform as commercially practicable in color, opacity, density and other physical properties. 3. Avoid compression, damage, or deformation to the ends of the pipe.

DETAILS FOR USE IN THE DESIGN AND INSTALLATION OF THE UNDERGROUND CHILLED WATER SYSTEM

1. Underground chilled water branches shall be sized for no greater than six feet per second water velocity and no greater than ten psi total pressure drop from the connection point to the building. Pressure gauges shall be provided on all building chilled water lines: one on the supply prior to any connection point, and the second on the return lines downstream of all coils where the chilled water return exits the building.
2. A bypass with check valve (and isolation valves for check valve servicing) shall be provided to allow flow through the building with the tertiary pumps off.
3. Pipe shall be of American manufacture, no substitutions. Pipe shall be furnished with integral bells. Spigot end pipe with separate double hub couplings is not acceptable.
4. Underground piping shall be bedded in compacted and preferably clean sand, in 6" layers, or fine gravel 8" under, around and 6" over pipe. Cover with densely compacted select stabilized backfill. Piping trenches within 8'-0" from building shall not have pea gravel or sand but shall be selected backfill densely compacted and stabilized.

PIPING

1. Underground Steel Piping:
    - Underground Chilled Water piping shall be Schedule 40 Carbon steel and shall be factory pre-insulated with foam-glass. All preinsulated pipe and fittings shall be factory fabricated to job dimensions and designed to minimize the number of field welds. Where possible, straight sections shall be supplied in 40-foot random lengths with piping exposed at each end for field joint construction. The system shall be computer analyzed by a PE registered engineer of the piping system manufacturer, having a minimum of five (5) years' experience, to determine stress on the carrier pipe and anticipated pipe thermal movement. The system design shall be in strict conformance with ANSI.
    - After the insulation has been applied on buried pipe and all joints and sealed as specified above the insulation shall be protected in lieu of metal jacketing with a heavy duty flexible jacket of 50 mil rubberized bitumen adhesive laminated to a 10 mil polyethylene film equal to Polyguard Products 'Insulrap 50' and installed in accordance with the manufacturer's directions.
    - All weld fittings shall be domestic made wrought carbon steel butt-welding fittings conforming to ASTM A234 and ASME/ANSI B16.9. Attach only to pipe with a hole for the entire length. Each fitting shall be stamped as specified by ASME/ANSI B16.9 and, in addition, shall have the laboratory control number metal stenciled on each fitting for ready reference as to physical properties required for any fittings selected at random. Fittings which have been machined, remarked, printed, or otherwise produced domestically from non-domestic forgings or materials will not be acceptable. Each fitting is to be marked in accordance with MSS SP-25.
    - Weld Testing: All welds are subject to inspection—visual, X-ray, and/or Ultrasound—for compliance with specifications. UCF UES will employ a testing laboratory for the purposes of performing weld inspections and/or X-ray testing. All welds shall be inspected, with 20% undergoing documented independent x-ray inspections, with results submitted to UES for review and approval.
        - Initial visual and X-ray inspections will be provided

by the owner. The contractor shall be responsible for all labor, material and travel expenses involved in the re-inspection and re-testing of any welds found to be unacceptable. In addition, the contractor shall be responsible for the costs involved in any and all additional testing required or recommended by ASME/ ANSI Standards B31.1, B31.3, and B31.9, due to the discovery of poor, unacceptable, or rejected welds.

- Welds lacking penetration, containing excessive porosity or cracks, or found to be unacceptable for any reason, must be removed and replaced with an original quality weld as specified herein.
- All qualifying tests, welding and stress relieving procedures shall, moreover, be in accord with Standard Qualification for Welding Procedures, Welders and Welding Operators, Appendix A, Section 6 of the ASME/ANSI B31 Code for Pressure Piping, current edition.

2. High Density Polyethylene (HDPE):
   - High-density polyethylene pipe is strong, durable, flexible and lightweight. When fused together, HDPE offers a zero-leak rate due to the seamless nature of the pipe system. HDPE pipe offers a more environmentally sustainable footprint because it is nontoxic, corrosion and chemical resistant, has a long lifespan, and is suitable for trenchless installation methods.
   - HDPE pipe will not rust, corrode, tuberculate or support biological scale or growth, and has superb chemical resistance compared to traditional pipe materials. HDPE is also unaffected by bacteria and fungi, offering resistance to many organic substances.
   - HDPE has superior Flow Characteristics. Because high-density polyethylene pipe is smoother than steel, cast iron or ductile iron.
   - It has less drag and a lower tendency for turbulence at high flow rates. It also has superior chemical resistance and non-stick surface characteristics nearly eliminate scaling and pitting, preserving the excellent hydraulic characteristics throughout the pipe system's service life.
   - High Density Polyethylene (HDPE) Piping Installations - INTREPID 2499 NT Technical Information (Page 14)
   - For chilled water a minimum of SDR 17 is required.
   - The following standards and practices shall be adhered to: Polyethylene fabricated fittings shall be manufactured from polyethylene pipe, sheet stock or molded fittings meeting the material requirements of this specification and all appropriate requirements of AWWA C-901 or AWWA C-906.
   - Polyethylene fittings, including custom fabrications, shall have the same internal pressure rating as the mating pipe. At the point of fusion, the wall thickness and outside diameter of the fitting shall be in accordance with AWWA C-901 or AWWA C-906 for the same pipe size
   - Joining of HDPE Piping:
     - Pipe and fittings shall be joined by one of the following types of thermal fusion per the Manufacturer's recommended procedures: Butt fusion, Saddle fusion or Socket fusion.
     - All fusion joints shall be prepared using a data logging system. Each joint shall be uniquely identified with a permanent marker. Data log shall include:
     - Date & Time, Operators initials, Pre-heat temperature, Fusion pressure.
     - Upon request, the Manufacturer shall provide proof of fusion training by authorized Manufacture representative. Records of training shall be

maintained by the Contractor and should not exceed 12 months from date of construction.

- Other Methods of Joining:
  - Polyethylene pipe and fittings may be joined together or to other materials through the use of electrofusion fittings, flange adapters with back-up rings, mechanical couplings designed for connecting polyethylene pipe and fittings to itself or to another material, or MJ adapters. The Manufacturer of the joining device shall be consulted for proper installation procedures.
  - The performance requirements of the pipe and fittings shall comply with the most current version of AWWA C-901 or AWWA C-906. The Manufacturer shall be listed with NSF-61 certification and include the third party certification within the print line of the product.
  - The Contractor shall be responsible for field set-up and performance of the fusion equipment and the fusion procedure used by the operator. Upon request, the Contractor shall verify the fusion quality by making and testing per the Manufacturer's recommended qualification procedure. The Contractor shall be responsible for the necessary adjustments to the set-up, equipment, operation, and fusion procedure. Fusions that fail the qualification procedure shall be remade.

3. **All CHW piping shall be cleaned per UCF Chemical Treatment standards and procedures when it is installed. Before installation CHW piping shall be checked, upended, swabbed, if necessary, and all rust or dirt from storage or from lying on the ground shall be removed. The Contractor is cautioned to exercise rigid control of the interior cleanliness of the pipe as it will be impossible to flush clean after assembly.**

4. For Main Campus buildings served by the UCF District Energy Plants, CHW supply and return lines typically have piping with identical size and material for each system. Because these thermal distribution lines are identical in size and appearance for each thermal system, there is the potential for cross-connection between supply and return. To avoid possible cross-connection of supply and return lines, design engineers shall require field verification in construction documents and contractors shall field verify the configuration of supply and return lines, using an appropriate temperature sensing device and adequate system flow, before making building connections. Any discrepancy between construction documents and field verification should be promptly reported to the Project Manager and UES CHW representative immediately, so proper piping configuration can be verified

VALVES

1. Buried Valves
   - Valves, extension handles, and valve boxes shall be installed in accordance with AWWA C600, AWWA C605 and applicable Standard Drawings for valve and fitting installation.
   - 2" thru 42" diameter shall be resilient wedge gate valves, 250 psi working pressure, non-rising stem with square operating nut (turned counterclockwise to open), and –"O" ring packing; no substitutions. District and isolation valves shall be Mueller Gate Valves or UES approved equal
   - Currently all underground groove-type fittings such as (Victaulic) are prohibited.
   - All valves must be of threaded or flanged type. All valves shall be located such that the removal of their bonnets is possible. All flanged valves shown in horizontal lines with the valve stem in a horizontal position shall be positioned so that the valve stem

is inclined one bolt hole above the horizontal position. Valves shall be installed as nearly as possible to the locations indicated in the Construction Drawings. Any change in valve location must be approved by CHW Production Manager and indicated on the As-Built Drawings.

- All bronze and iron body gate valves shall be the product of one manufacturer for each product. Manufacturers of other types may not be mixed on the same project. Any and all butterfly and ball valves shall be pre-approved by the UES CHW Production Manager. If approved, they shall be of the same manufacturer.
- All bronze valves used in CHW systems, shall be Class 150 SWP. Gate valves 2 1/2" or larger shall be Class 150.
- All gate and globe valves shall be union bonnet design.
- Metal used in the stems of all valves shall conform to ASTM B371 Alloy 694, ASTM B99 Alloy 651, or other corrosion resistant equivalents, no substitution allowed. Alloys used in all valves shall contain no more than 15% zinc. No yellow brass valves will be allowed.
- All iron body valves shall have the pressure containing parts constructed of ASTM A126 class B iron. Stem material shall meet ASTM B16 Alloy 360, ASTM 371 Alloy 876 silicon bronze, ASTM B584, or their equivalent. Gates and globes shall be bolted bonnet with OS&Y (outside screw and yoke) and rising stem design.
- All valves shall be re-packable under pressure, with the valve in the full open position. All valves and shutoff valves of every character shall have malleable iron hand wheels, except iron body valves 2-1/2" and larger which may have either malleable iron or ASTM A126 Class B, gray iron hand wheels.
- Packing for all valves shall be free of asbestos fibers. It is incumbent upon the manufacturer to select the best quality standard packing for the intended valve service. At the end of one year, period spot checks will be made, and should the packing show signs of hardening or causing stem corrosion, then all valves supplied by the manufacturer shall be repacked by the Contractor, at no expense to the Owner, with a packing material selected by the Owner. Valves 12" and larger located with stem in horizontal position shall be drilled and tapped in accordance with MSS-SP-45 to accommodate a drain valve and equalizing by-pass valve assembly.

2. Above ground Valves:
    - Above ground 4" through 36" shall be resilient wedge gate valves (AWWA C509), 250 psi, rising stem with hand-wheel operator (turned counter-clockwise to open) and - 'O' ring packing; no substitutions.

VALVE BOXES

1. Valve boxes shall be 2–piece cast iron, screw type, 51⁄4-inches shaft with stay-put heavy-duty cover, or a three-piece with bell bottom (See figure below.).
2. Valve Box Installation: Valve boxes shall be set in 24"X24" concrete surface, as the site requires. When boxes are set in pairs, the "CWS" and "CWR" markings on the rims shall be placed at points closest to each other to indicate valve pairs.
3. Valve Boxes: A valve box shall be provided for each buried valve; Valve box covers shall be marked "CWS" and "CWR" accordingly, welded or stamped on the rims for chilled water supply and chilled water return valves respectively, and painted white.
4. See Figure 04 & 09 for details.

TAPPING SLEEVES, VALVES & WET TAPS:

1. Tapping sleeves for 2-inch through 42-inch mains shall be cast iron, 200 psi working pressure.
2. Tapping valves shall be resilient wedge Gate valve, 250

psi working pressure, non-rising stem with 2-inches square operating nut (turned counterclockwise to open), and "O" ring packing; no substitutions, with flanged or mechanical joint ends. UES recommended tapping sleeves are Mueller H-615, American 2800-C, or UES-approved equal.

3. Tapping sleeve shall be pressure tested at 150 psi for one hour, with no drop in pressure. Wet tap and tapping sleeve pressure test must be witnessed by UES. Coupon from wet tap must be turned over to UES.
4. All internal tapping machines, such as cutting heads, etc., will be disinfected in compliance with AWWA C601 and C900, prior to making any wet tap.

CLEANING, FLUSHING, AND PASSIVATION

1. The contractor is responsible for providing a complete written flushing, cleaning and passivation plan to UES and the Engineer of Record for review and approval. At a minimum, the plan should include the following: Equipment used, equipment bypassed, required velocities, anticipated timeline for each activity, target criteria for proceeding to next step and intended location for discharging all waste.
2. The contractor is responsible for all bypassing of equipment, piping, pumps and temporary connections required to flush the entire piping system. Flushing through HVAC equipment such as, but not limited to AHU coils, chiller evaporator barrels, control valves, heat exchangers, permanent pumps, etc. is NOT acceptable. Use of permanent pumps is only acceptable with prior approval from UES.
3. These procedures shall be followed by the Contractor and witnessed by the UCF PM, UCF Chemical Contractor or UES CHW designee.
4. Five (5) days' notice in advance of the start of testing shall be provided. Testing shall not proceed until all concrete thrust blocks are in place and cured or other restraining devices are installed. While piping is being filled, all air shall have been purged from the test section, with additional release valves provided if required.
5. Piping shall be cleared of all debris and rinsed with clean water per US Waters cleaning procedure.
6. Piping system dead legs and low points shall be blown down.
7. Documentation of this test must be provided to UES Field Representative & CHW Production Manager.
8. UCF current chemical contractor (US Water) account representative Paul Lioce (904-540-7910) shall be contacted for proper procedure and for all required chemicals. No substitution of chemicals or procedures are allowed.
9. The CHW Production Manager shall be notified of the total amount of detergent and water mixture to be drained prior to starting the procedure. UCF EH&S must approve the procedure and quantity.
10. UCF Chemical Contractor (US Water) shall take water sample and advise UES-CHW Production Manager when all required levels and test have been passed. CHW will remain disconnected until this process in complete, and only then will UES approve opening the new system to the district.
11. Only chemicals approved by the chilled water chemical treatment vendor (US Water) shall be introduced into the UCF chilled water piping system.
12. All new or replacement chilled water piping systems shall be chemically cleaned prior to connection to the main chilled water system.

NOTE: CHEMICALLY TREATED WATER CANNOT BE

DISCHARGED TO GROUND. IF CHILLED WATER MUST BE EVACUATED INTO THE CAMPUS SANITARY SYSTEM FROM ANY SOURCE, FORMAL APPROVAL MUST BE REQUESTED AND GRANTED THROUGH UCF'S EH&S DEPARTMENT. EACH PROPOSED INSTANCE OF CHILLED WATER EVACUATION INTO THE SANITARY SYSTEM MUST BE INDIVIDUALLY REQUESTED.

HYDROSTATIC PIPE LINE TESTING

1. After the pipe has been laid, but prior to backfilling operations, all pipes shall be subjected to hydrostatic pressure tests. Tests shall not be conducted until at least 12 hours have elapsed since pipe laying and at least five (5) days have elapsed since placing of concrete thrust blocks. The pipe shall be filled with water, which shall remain without external application of pressure for 24 hours before tests are conducted.
2. Prior to hydrostatic testing, flush pipe system with fresh water until piping is free of dirt and foreign matter.
3. Pressure shall be applied by a pump and measured by a test gage. The Contractor shall furnish all necessary apparatus and labor for conducting the pressure and leakage tests.
4. The Contractor is responsible to ensure the release of air from the line during filling, as well as the prevention of collapse due to vacuum when dewatering the line.
5. Hydrostatic testing shall be performed prior to installation of the insulation and backfill. At no time shall the pipe be covered prior to the completion of the hydrostatic testing.
6. Pressure tests must be scheduled through the UES website 48 business hours prior to the test.
7. Hydrostatic test pressures for main campus shall be 150 psi and executed as outlined by pipe type below. A summary results report including ambient site temperatures and time/date stamped images of psi gauge readings shall be forwarded to UES Engineering via the UCF Project Manager for review and approval.

   a. Carbon Steel (rigid pipe):
      - Monitor for 24 hrs.
      - The pressure shall not drop by more than 5 psi for the duration of the test.

   b. HDPE (elastic pipe):
      - Utilize ASTM F2164 Pressure Rebound Method.
      - Monitor and add makeup water as needed to keep the pressure constant for 4 hrs.
      - Check all flanged connections and retorque any bolts as needed during test.
      - Reduce pressure by 10 psi (to 140 psi) and monitor pressure for 1 hour.
      - The pressure shall stabilize (after rebound) at 140 psi +/- 5% for the remainder of the test duration.

PIPE INSULATION

1. CHW lines shall be insulated in accordance with the Underground Piping Systems Design Standard.
2. Jackets for pre-insulated piping, including fittings, shall be seamless high-density urethane polymer (HDUP), HDPE, or, fiberglass reinforced polyester resin (FRP). Jackets that are mitered, taped or wrapped will not be allowed.
3. For systems where the entire factory applied insulation surface on the carrier pipe can be visual inspected, jackets applied directly to insulation surfaces shall be a minimum thickness of 80 mils for pipe sizes 6" and below, 100 mils for sizes 8"-12", 120 mils for 14"-20", and 150 mils 24" and larger. For systems requiring injection of urethane

foam into the annulus between the carrier pipe and jacket, the jacket thickness shall be 50% thicker than the above minimums.

4. Pre-insulated pipe and fittings shall be provided with factory End Seals. End Seals may be constructed of the same material as the jacket, or, cross-linked polyolefin heat shrink seals, bonded to the jacket and the core pipe protecting and sealing the insulation.
5. After hydrostatic testing of new CHW pipe, all field joints shall be insulated, with kits provided by the pre-insulated pipe manufacturer. Field insulation of fittings shall be approved on a case by case basis by CHW Production Manager or CHW Representative.
6. Field joint insulation shall be applied only in straight sections by pour foam in situ, using molds furnished by the system manufacturer. Field joint insulation surface shall be sealed with a heat shrinkable sleeve.
7. Cellular glass insulation with a minimum sixteen-thousandths inch thick smooth finish aluminum jacketing with integral vapor barrier will be used for all exterior above-grade chilled water piping. Jacketing bands shall be one-half inch wide, with spacing of twelve inches or less between bands.
8. Labeling and flow arrows shall be provided as needed for all piping, clearly delineating supply/return lines and flow directions.

PIPE BEDDING MATERIAL

1. All buried pipes shall be placed on 6" deep bed of sand, free of rocks and debris. Back fill over pipe up to 6" over top of pipe with sand.
2. All lines shall have the following bedding materials:
   - Under paved areas: 6" of bedding sand and 6" sand cover with remaining to be 2% stabilized sand to subgrade.
   - Under non-paved areas – 6" bedding sand with remainder of back fill to be select fill.

UNDERGROUND PENETRATIONS INTO BUILDINGS

1. Penetrations of concrete walls shall be core-drilled holes or cast-inplace PVC or galvanized steel sleeves with seals.
2. Penetrations of masonry walls shall be galvanized steel sleeves with seals.
3. Seals shall be installed in accordance with manufacturer's instructions.
4. Isolation Valves must be installed on all new CHW Lines prior to entering any building or structure. Valve must be UCF UES standard gate Valves. Interior butterfly valves on supply/return lines inside buildings are not acceptable as isolation valves.
5. Valves shall be suitable for bi-directional flow and drop tight shutoff to 150 psig (zero leakage).
6. Seats shall be adjustable in-line without the need of special tools. All valves shall be hydrostatic and leak tested in accordance with AWWA.
   - Provide valves with shaft extensions with centering rings to within one foot of grade.
   - Furnish with enclosed operators with 2-inches square operating nut. Nut turned counter-clockwise (left) to open.
   - The pressure ratings indicate the maximum allowable value. All valves will meet or exceed the performance specifications and requirements of AWWA C500 and AWWA C504. Valves, vents and drains will be coated to protect against corrosion.

MECHANICAL JOINT RESTRAINTS

Mechanical joint restraints shall be used for 4-inch thru 24-inch diameter pipe.

SERVICE SADDLES (See Figure 7, page 14)

1. Service saddles for pipes 4-inches thru 12" inches diameter shall be double strap bronze with AWWA I.P. thread with tap diameter to match service connection size.
2. Pipes 14-inches thru 36-inches diameter shall be fusion nylon coated body; 2- inches ID threaded outlet, double stainless steel straps and stainless steel bolts and nuts.

AIR RELEASE AND ISOLATION VALVES

1. Air release valves shall be installed as all high points of piping system.
2. Air release valves shall be 2-inches, cast-iron body, threaded inlets, stainless steel trim, floats, seats, and linkage. Air release valves shall be universal air-vacuum type. These air release valves shall be at the high points of the piping system.
3. Corporation stops shall not be used. In situations where corporation stops are necessary or practical, an RFI shall be submitted along with rationale for their use. Corporation stops shall only be used with express written permission from the UES CHW Production Manager or designated representative.
4. All air release valves will have isolation valves and piping/nipples made of 316 stainless steel.

DRAIN AND AIR VENTS

1. 1.5-inches to 4-inches: Working pressure 150 psig at 38°F, ball valve, carbon steel body, stainless steel ball and stem, welded ends, carbonized PTFE and FDM seats.

THRUST BLOCKS

1. UES prefers mechanical joint thrust restraints on all fittings in lieu of concrete thrust blocks. On certain piping the use of additional tie rods restraints on bell and spigot pipe joints may also be required.
2. Where restrained mechanical joints are not used, concrete thrust blocks shall be provided for all pressure pipe fittings, changes in pipe alignment/direction, and at all other points where there is a possibility of joint separation under pressure and no other method of restraint is specified. Provide anchors and supports where necessary for fastening work into place. Make proper provisions for expansion or contraction of pipelines. Thrust blocks shall be placed between solid ground and the pipe or fittings to be anchored as detailed. Thrust blocks shall be as detailed on the drawings, or where not detailed, in accordance with AWWA C600 and pipe manufacturer's recommendations. Use 4,000 psi strength concrete mix (28 days strength).
    - Backfilling operations at thrust blocks may begin as soon as the concrete has set sufficiently to remain in position and withstand the weight of the earth. Concrete shall not be disturbed or pressure loaded for at least five (5) days after placing unless otherwise permitted by UES CHW and a minimum of 2500 psi compressive strength is achieved.
    - See figures 8A and 8B for details.

ACCESSORIES

1. Valve Extension Handles: Extension handles for supply and return valves shall stop not less than 3-feet from grade.
2. Wall Penetration Sleeves: 1/8 inch hot-dip galvanized steel sleeve with 1/8 inch continuously welded 2-inches weep ring shall be provided.
3. D-Wall Penetration Seals: Elastomeric link-type

mechanical seal.

UTILITY PIPE COVER, CLEARANCES, AND LOCATING DEVICES

1. Cover: All lines must maintain a minimum of 36" of cover from top of pipe.
2. New pipe installations must be a minimum of 12" clear of intersecting utilities.
3. Warning Tape: All buried pipelines shall have plastic warning tape installed a minimum of 12- inches above the top of the pipelines. The warning tape shall be a minimum of 2- inches wide and blue with black lettering reading "CAUTION, CHILLED WATER MAIN BURIED BELOW".
4. Tracer Wire: No. 8 AWG insulated copper wire, solid or stranded, shall be provided in sufficient length to be continuous over each separate run of pipe and run into its own dedicated chase pipe adjacent to the valve box, with sufficient slack for use by utility locater. Do not loop into valve box. Wire must be attached to pipe and not allowed to "float freely". See Figure 4, page 16: Valve & Valve Box, for details. A single run of tracer wire shall not exceed 300 linear feed.

PRESSURE AND TEMPERATURE GAUGES

1. All liquid-filled pressure gauges will have a four and one-half inch face, one-quarter inch National Pipe Thread (NPT) bottom connection, and black scale with white background with operating pressure to be at the mid-range of the scale.
2. All temperature gauges shall be well type.

CHW - FIGURE 00: GENERAL NOTES RELATED TO CHILLED WATER SERVICE & METERING Rev. 10/30/2017

1. REFER TO RESPONSIBILITY TABLE & SELECTION MATRIX FOR PARTY DESIGNING, PROVIDING, INSTALLING, TERMINATING AND VERIFYING COMPONENTS.
(A) 2. UCF'S INTENT IS TO RECORD THE CHILLED WATER (CHW) USAGE FOR EACH BUILDING. THEREFORE, EACH CHW SERVICE TO THE BUILDING SHALL BE EQUIPPED WITH A FLOW METER AND BTU METER AS DEPICTED IN THESE ASSOCIATED FIGURES.
(B) 3. BTU AND FLOW METER SHALL BE MOUNTED INDOORS, IN A LOCATION FREE FROM DIRECT SUNLIGHT, HIGH TEMPERATURES, CONDENSATION AND EXCESS MOISTURE. UCF WILL PROVIDE THE EQUIPMENT AND CONTRACTOR WILL INSTALL.
(C) 4. WORK ORDERS TO REQUEST BTU AND FLOW METERS MUST BE SUBMITTED AT LEAST 10 WEEKS PRIOR TO DESIRED DELIVERY DATE. THE FORM FOR REQUESTING THIS INFORMATION CAN BE LOCATED AT http://www.energy.ucf.edu/forms-and-procedures . SEARCH FOR A LINK NAMED "UTILITIES AND SERVICE REQUEST".
(D) 5. ALL TEMPERATURE SENSOR THERMOWELLS MUST BE RECESSED IN THE PIPE ACCORDING TO THE MANUFACTURER'S SPECIFICATIONS.
(E) 6. THERMAL INSULATORS MUST BE INSTALLED FOR EACH TEMPERATURE SENSOR TO PROTECT SENSORS FROM MOISTURE.
(F) 7. TERMINALS ON TEMPERATURE SENSORS ARE TO BE THOROUGHLY TAPED/SEALED FROM EXPOSURE TO AVOID SHORTING BY CONTACT WITH MOISTURE OR OTHER COMPONENTS. (DIV 33 UCF).
(G) 8. PRIOR TO CONNECTING TO THE CAMPUS CHW DISTRIBUTION SYSTEM, ALL NEW OR MODIFIED PORTIONS OF THE CHW SYSTEM MUST UNDERGO CLEANING AND PASSIVATION. THIS PROCESS MUST BE DEFINED, APPROVED AND TESTED BY UCF'S CHEMICAL TREATMENT PROVIDER, US WATER SERVICES, IN WRITING. PLEASE CONTACT MICHAEL GROH @ 954-430-0758 OR PAUL LIOCE @ 904-540-7910.
(H) 9. ALL UTILITIES, VALVES, FITTINGS, PIPES WILL HAVE X, Y AND Z GPS COORDINATES TAKEN AND ATTACHED TO THE AS-BUILTS AS WELL AS PROVIDED IN ELECTRONIC FORMAT AS SPECIFIED BY THE UCF UES GIS MANAGER.
(I) 10. ALL PIPELINES SHALL BE BURIED TO THE GREATEST EXTENT POSSIBLE. MINIMUM COVER FOR THE BURIED PIPELINES SHALL BE 36-INCHES TO THE TOPE OF THE PIPE.
(J) 11. CHILLED WATER CONNECTIONS SHALL NOT BE OPENED BY UCF UES UNTIL A SCANNED COPY OF THE AS-BUILT DOCUMENTS HAVE BEEN SUBMITTED AND APPROVED BY UCF UES.
(K) 12. DIFFERENT UTILITIES SHALL NOT BE STACKED WITHIN THE SAME TRENCH.

VERIFICATION AREA - PLEASE COMPLETE AND SUBMIT TO UCF UES PRIOR TO 100% CD RELEASE

	Initials	Date
(A)		
(B)		
(C)		
(D)		
(E)		

	Initials	Date
(F)		
(G)		
(H)		
(I)		
(J)		

	Initials	Date
(K)		
(L)	NA	NA
(M)	NA	NA
(N)	NA	NA
(O)	NA	NA

	Initials	Date
(P)	NA	NA
(Q)	NA	NA
(R)	NA	NA
(S)	NA	NA
(T)	NA	NA

CHW - FIGURE 01: CHILLED WATER METERING RESPONSIBILITY TABLE & SELECTION MATRIX

Rev. 7/1/2019

RESPONSIBILITY TABLE

COMPONENT	DESIGN BY (NOTE 1)	PROVIDED BY	INSTALLED BY	TERMINATED BY	VERIFIED BY
BTU METER, FLOW METER, TEMP SENSORS & WIRING BETWEEN DEVICES	SIZE/QTY - UCF LOCATION - EOR, UCF UES	UCF UES	CONTRACTOR	CONTRACTOR - NOTE 2	EOR & UCF UES
CONDUIT & WIRING BETWEEN DEVICES, BTU METER & BLDG LEVEL DDC	EOR, UCF UES	CONTRACTOR	CONTRACTOR	CONTRACTOR - NOTE 2	EOR & UCF UES
INTEGRATION FROM BTU METER TO CAMPUS LEVEL DDC	EOR, UCF UES	CONTRACTOR	--	--	EOR & UCF UES
CONDUIT & WIRING FOR METER POWER & GROUNDING	EOR, UCF UES	CONTRACTOR	CONTRACTOR	CONTRACTOR	EOR & UCF UES
ALL OTHER CHW COMPONENTS NOT RELATED TO METER	EOR, UCF UES	CONTRACTOR	CONTRACTOR	CONTRACTOR	EOR & UCF UES

NOTES:
1. WHEN REQUIREMENTS ARE PROVIDED BY UCF UES, THEY SHALL BE CONSIDERED REQUESTS IN ADDITION TO CODE REQUIRED MINIMUMS. ENGINEER OF RECORD (EOR) SHALL REVIEW, CONFIRM APPLICABILITY OF REQUESTS AND INCORPORATE THESE ITEMS INTO THE PROJECT DOCUMENTS AS APPLICABLE.
2. TERMINATION INCLUDES INSTALLATION OF COMPONENTS AND PROPER TERMINATION OF WIRING BETWEEN COMPONENTS. IT SHALL ALSO INCLUDE PROPERLY LABELING THE WIRING AT EACH TERMINATION POINT.
3. AN ELECTRICAL PANEL SCHEDULE SHALL BE UPDATED WHENEVER WORK MODIFIES THE EQUIPMENT OR AREA ASSOCIATED THAT CIRCUIT.

SELECTION MATRIX

LINE SIZE = LESS THAN 1"	
FLOWMETER	ONICON MODEL # F-3100 OR APPROVED EQUAL
FLOWMETER STYLE	IN-LINE (ELECTROMAGNETIC)
BTU METER / DISPLAY	ONICON SYSTEM-10-BAC-IP (WALL MOUNTED / INTERIOR) OR APPROVED EQUAL
TEMPERATURE SENSORS	PAIRED/CALIBRATED WITH BTU METER (WITH THERMAL INSULATORS)

LINE SIZE = 1" TO 72"	
FLOWMETER	ONICON MODEL # F-3200 OR APPROVED EQUAL
FLOWMETER STYLE	IN-LINE (ELECTROMAGNETIC), FLANGED
BTU METER / DISPLAY	ONICON SYSTEM-10-BAC-IP (WALL MOUNTED / INTERIOR) OR APPROVED EQUAL
TEMPERATURE SENSORS	PAIRED/CALIBRATED WITH BTU METER (WITH THERMAL INSULATORS)

*MUST MEET MINIMUM SPECIFICATIONS OF THE ONICON MODEL AS #S SPECIFIED.

CHW - FIGURE 02: STANDARD ROADWAY OPEN CUT DETAIL

Rev. 11/17/2016

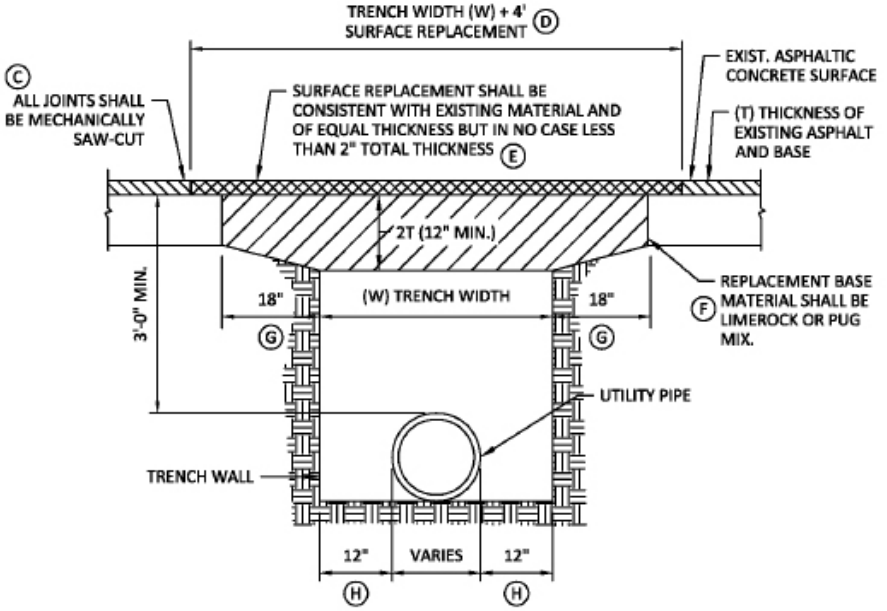

NOTES:
(A) 1. BACKFILL SHALL BE PLACED IN 6" LAYERS FROM BENEATH THE HAUNCHES OF THE PIPE TO THE BASE AND COMPACTED TO 98% DENSITY PER AASHTO T-180 MODIFIED PROCTER.
(B) 2. BASE MATERIALS SHALL BE PLACED IN TWO OR THREE LAYERS ROLLED AND TAMPED TO ABOVE SPECIFIED DENSITY.

VERIFICATION AREA - PLEASE COMPLETE AND SUBMIT TO UCF UES PRIOR TO 100% CD RELEASE

	Initials	Date
(A)		
(B)		
(C)		
(D)		

	Initials	Date
(E)		
(F)		
(G)		
(H)		

	Initials	Date
(I)	NA	NA
(J)	NA	NA
(K)	NA	NA
(L)	NA	NA

	Initials	Date
(M)	NA	NA
(N)	NA	NA
(O)	NA	NA
(P)	NA	NA

CHW - FIGURE 03: LOCATING WIRE TERMINAL

Rev. 11/17/2017

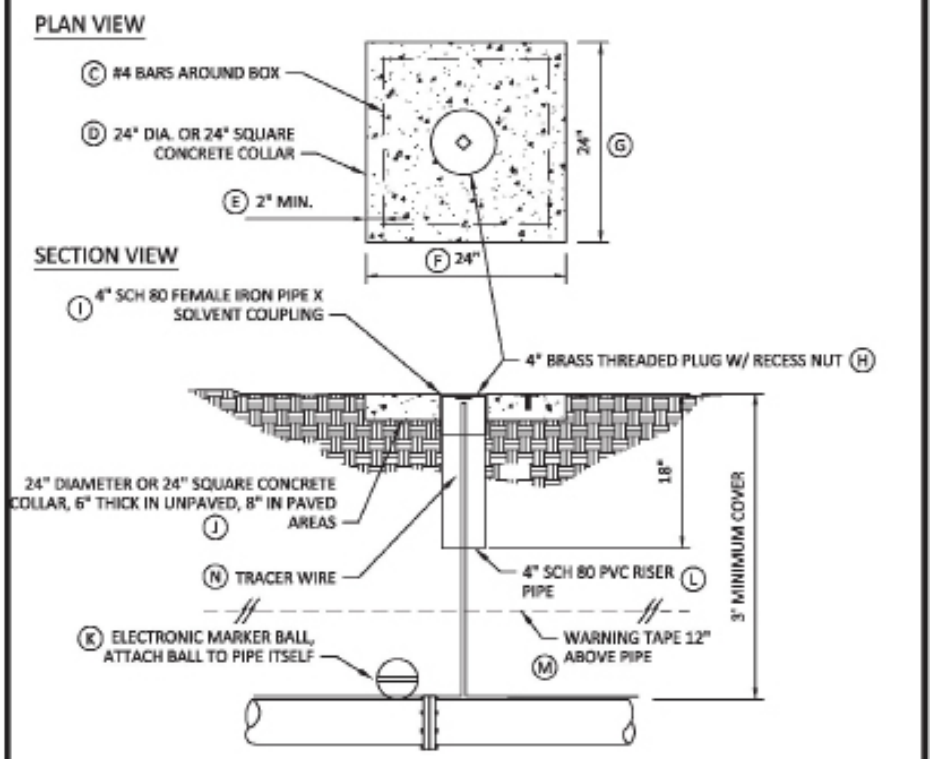

NOTES:

A 1. LOCATING WIRE TERMINAL SHALL BE PROVIDED ALONG BURIED UTILITY WHERE DISTANCE BETWEEN VALVE BOXES EXCEEDS 300 FEET. LOCATING WIRE TERMINAL SHALL BE PROVIDED AT 300 FOOT INTERVALS NOT GREATER THAN 300 FEET IN THESE INSTANCES.

B 2. LOCATOR WIRE ACCESS - 4" SCHEDULE 80 PVC, FEMALE ADAPTER COUPLING AND 4" BRASS PLUG WITH RECESSED NUT. TERMINATE INSULATED, SOLID 10 GAUGE COPPER LOCATOR WIRES AT TOP WITH 12" OF EXTRA WIRE. INSULATED WIRE SHALL BE COLOR CODED.

VERIFICATION AREA - PLEASE COMPLETE AND SUBMIT TO UCF UES PRIOR TO 100% CD RELEASE

	Initials	Date		Initials	Date		Initials	Date		Initials	Date
A			F			K			P	NA	NA
B			G			L			Q	NA	NA
C			H			M			R	NA	NA
D			I			N			S	NA	NA
E			J			O	NA	NA	T	NA	NA

CHW - FIGURE 04: VALVE & VALVE BOX DETAIL

Rev. 10/30/2017

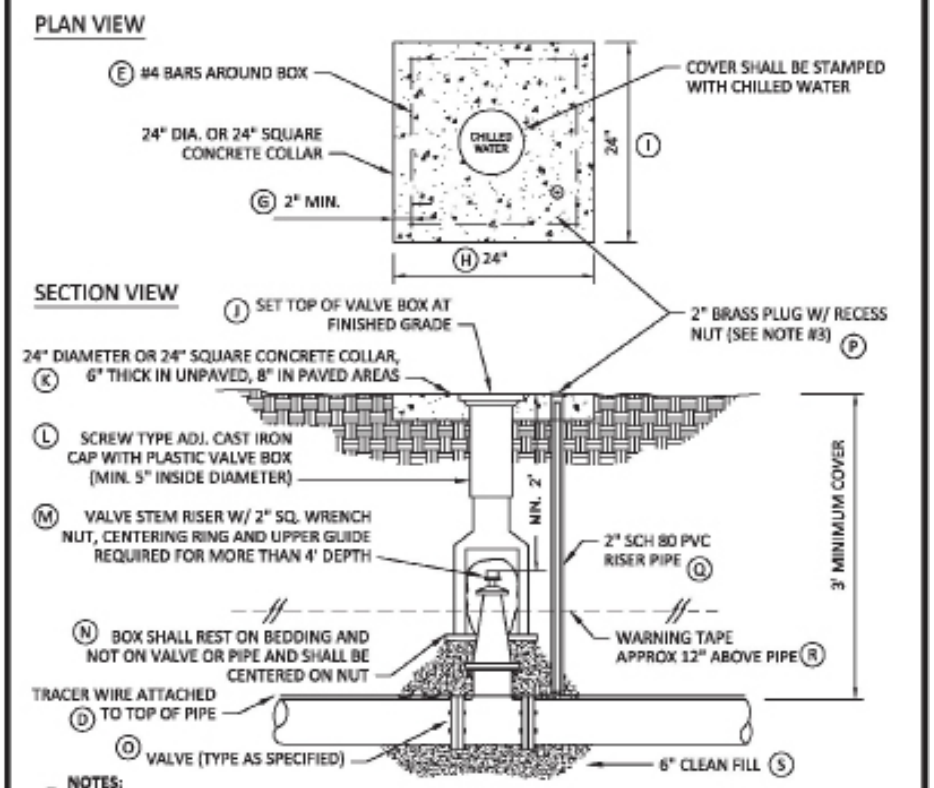

NOTES:

A 1. VALVES SHALL NOT BE LOCATED IN STREET CURBS.

B 2. VALVE COVERS SHALL BE PAINTED WHITE.

C 3. LOCATOR WIRE ACCESS - 2" SCHEDULE 80 PVC, FEMALE ADAPTER COUPLING AND 2" BRASS PLUG WITH RECESSED NUT. TERMINATE INSULATED TRACER WIRES AT TOP WITH 12" OF EXTRA WIRE.

VERIFICATION AREA - PLEASE COMPLETE AND SUBMIT TO UCF UES PRIOR TO 100% CD RELEASE

	Initials	Date		Initials	Date		Initials	Date		Initials	Date
A			F			K			P		
B			G			L			Q		
C			H			M			R		
D			I			N			S		
E			J			O			T	NA	NA

CHW - FIGURE 05A: BTU METER INSTALLATION FOR NON-CONDUCTIVE PIPE

Rev. 4/11/2024

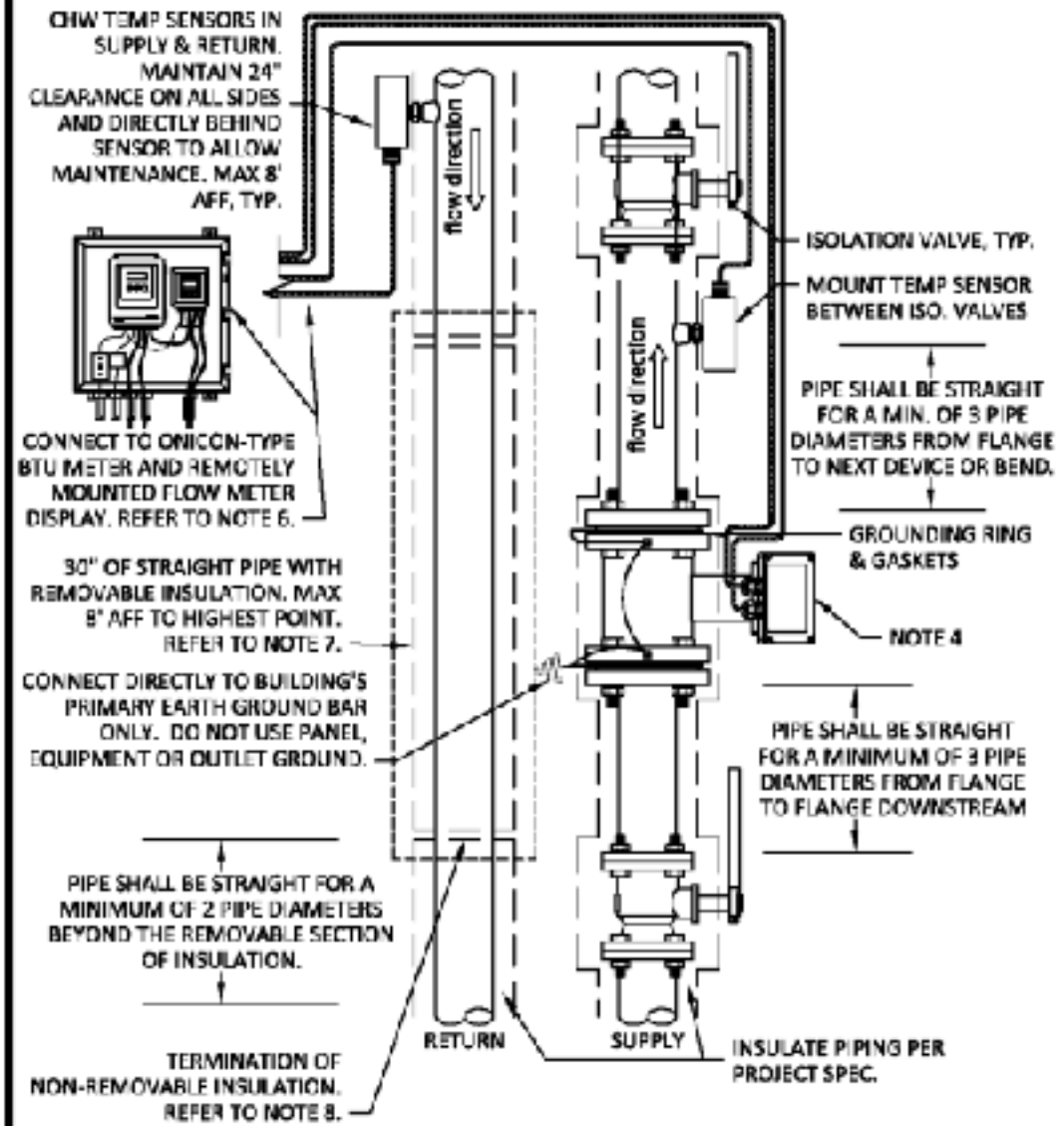

NOTES:

*ALL COMPONENTS MUST BE LOCATED AFTER THE CAMPUS CHW LOOP AND BEFORE ANY BYPASSES OR BRANCH CONNECTIONS IN THE BUILDING.

1. THIS DETAIL IS INTENDED TO BE USED IN CONJUNCTION WITH CHW - FIGURE 05C.
2. FLANGE STYLE FLOW METER IS SHOWN. A THREADED STYLE IS USED FOR PIPE SIZES LESS THAN 1". PLEASE REFER TO THE RESPONSIBILITY TABLE AND SELECTION MATRIX FOR SPECIFIC MODEL.
3. MANUFACTURER CALIBRATION TAGS SHALL BE SECURELY FASTENED TO RESPECTIVE DEVICE. FINAL EQUIPMENT MANUFACTURERS SHALL BE COMPATIBLE WITH EXISTING SYSTEM AND APPROVED BY UES PRIOR TO INSTALLATION.
4. COMPLETE AND ATTACH BTU METER AND FLOW METER START-UP SHEETS AND DELIVER TO UCF UES FOR REVIEW. AS PART OF START-UP, CONFIRM ALL FLOW METER, TEMP SENSOR AND BTU METER SERIAL NUMBERS MATCH.
5. FLOW METER SHALL HAVE 24" OF CLEARANCE, MEASURED FROM THE SURFACE OF THE PIPE, AND EXTENDED 360 DEGREES AROUND THE PIPE. HIGHEST POINT OF FLOW METER SHALL BE MAX 8' AFF.
6. BTU METER AND FLOW METER DISPLAY SHALL BE REMOTE MOUNTED IN A LOCKABLE ENCLOSURE. REFER TO CHW DETAIL 05C FOR MORE INFORMATION.
7. REMOVABLE INSULATION SHALL BE SUITABLE FOR REUSE AND PROVIDED IN 2 LAYERS. THE 1ST LAYER SHALL MATCH THE THICKNESS OF THE EXISTING INSULATION. THE SECOND LAYER SHALL COVER THE ENTIRE 1ST LAYER AND EXTEND AT LEAST 3" BEYOND EACH END OF THE NON-REMOVABLE INSULATION.
8. NON-REMOVABLE SECTION OF INSULATION SHALL BE PROPERLY TERMINATED ON EACH END OF REMOVABLE SECTION AND SEALED TO PIPING TO MAINTAIN INTEGRITY OF THE VAPOR BARRIER.
9. ALL CHW METERING COMPONENTS INCLUDING BTU METER, FLOW METER, TEMP SENSORS AND THERMAL WELLS ARE PROVIDED BY UES AND FUNDED BY THE PROJECT.

CHW - FIGURE 05B: BTU METER INSTALLATION FOR CONDUCTIVE PIPE

Rev. 4/11/2024

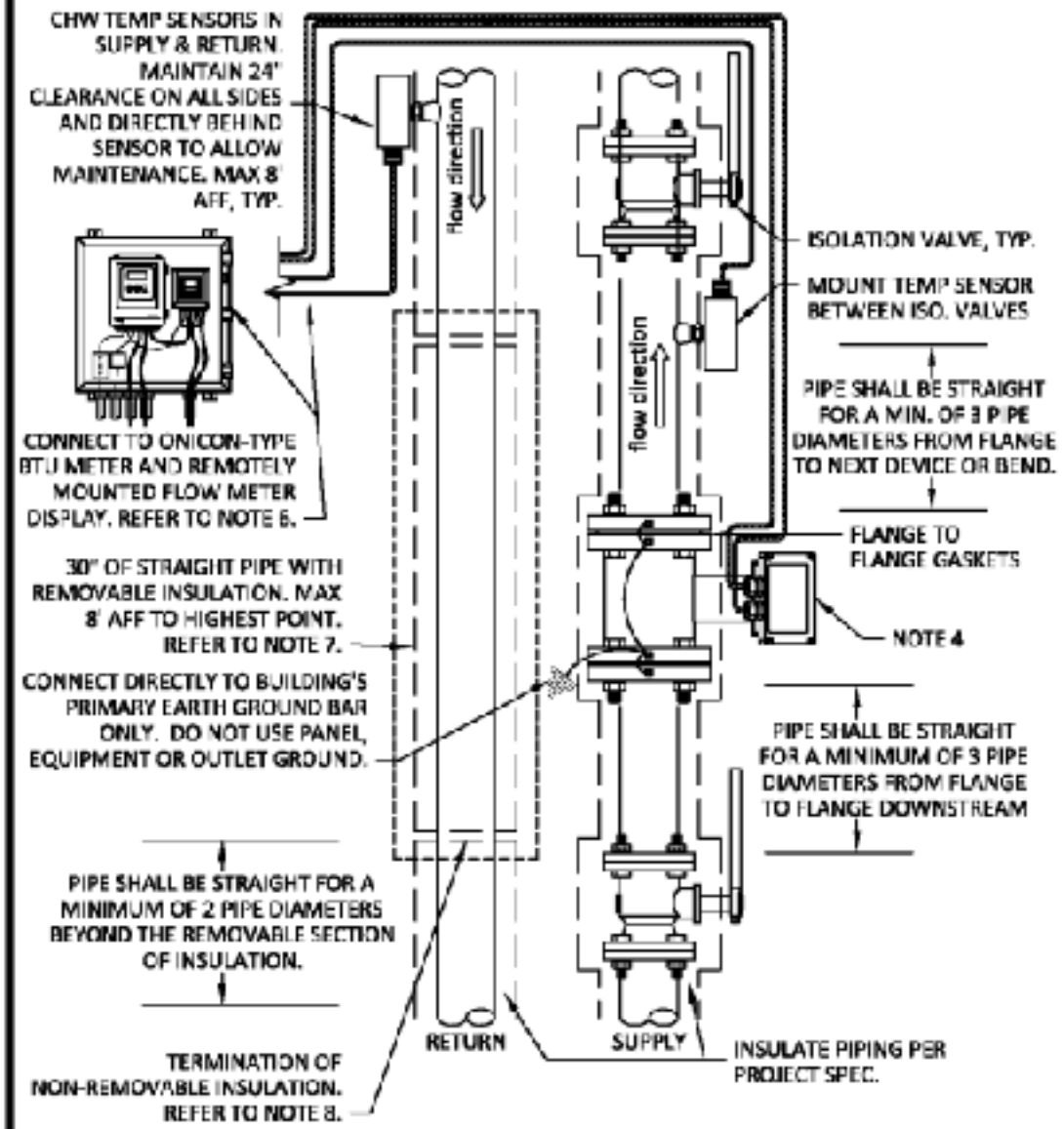

NOTES:

*ALL COMPONENTS MUST BE LOCATED AFTER THE CAMPUS CHW LOOP AND BEFORE ANY BYPASSES OR BRANCH CONNECTIONS IN THE BUILDING.

1. THIS DETAIL IS INTENDED TO BE USED IN CONJUNCTION WITH CHW - FIGURE 05C.
2. FLANGE STYLE FLOW METER IS SHOWN. A THREADED STYLE IS USED FOR PIPE SIZES LESS THAN 1". PLEASE REFER TO THE RESPONSIBILITY TABLE AND SELECTION MATRIX FOR SPECIFIC MODEL.
3. MANUFACTURER CALIBRATION TAGS SHALL BE SECURELY FASTENED TO RESPECTIVE DEVICE. FINAL EQUIPMENT MANUFACTURERS SHALL BE COMPATIBLE WITH EXISTING SYSTEM AND APPROVED BY UES PRIOR TO INSTALLATION.
4. COMPLETE AND ATTACH BTU METER AND FLOW METER START-UP SHEETS AND DELIVER TO UCF UES FOR REVIEW. AS PART OF START-UP, CONFIRM ALL FLOW METER, TEMP SENSOR AND BTU METER SERIAL NUMBERS MATCH.
5. FLOW METER SHALL HAVE 24" OF CLEARANCE, MEASURED FROM THE SURFACE OF THE PIPE, AND EXTENDED 360 DEGREES AROUND THE PIPE. HIGHEST POINT OF FLOW METER SHALL BE MAX 8' AFF.
6. BTU METER AND FLOW METER DISPLAY SHALL BE REMOTE MOUNTED IN A LOCKABLE ENCLOSURE. REFER TO CHW DETAIL 05C FOR MORE INFORMATION.
7. REMOVABLE INSULATION SHALL BE SUITABLE FOR REUSE AND PROVIDED IN 2 LAYERS. THE 1ST LAYER SHALL MATCH THE THICKNESS OF THE EXISTING INSULATION. THE SECOND LAYER SHALL COVER THE ENTIRE 1ST LAYER AND EXTEND AT LEAST 3" BEYOND EACH END OF THE NON-REMOVABLE INSULATION.
8. NON-REMOVABLE SECTION OF INSULATION SHALL BE PROPERLY TERMINATED ON EACH END OF REMOVABLE SECTION AND SEALED TO PIPING TO MAINTAIN INTEGRITY OF THE VAPOR BARRIER.
9. ALL CHW METERING COMPONENTS INCLUDING BTU METER, FLOW METER, TEMP SENSORS AND THERMAL WELLS ARE PROVIDED BY UES AND FUNDED BY THE PROJECT.

CHW - FIGURE 05C: REMOTELY MOUNTED BTU METER DETAIL

Rev. 4/11/2024

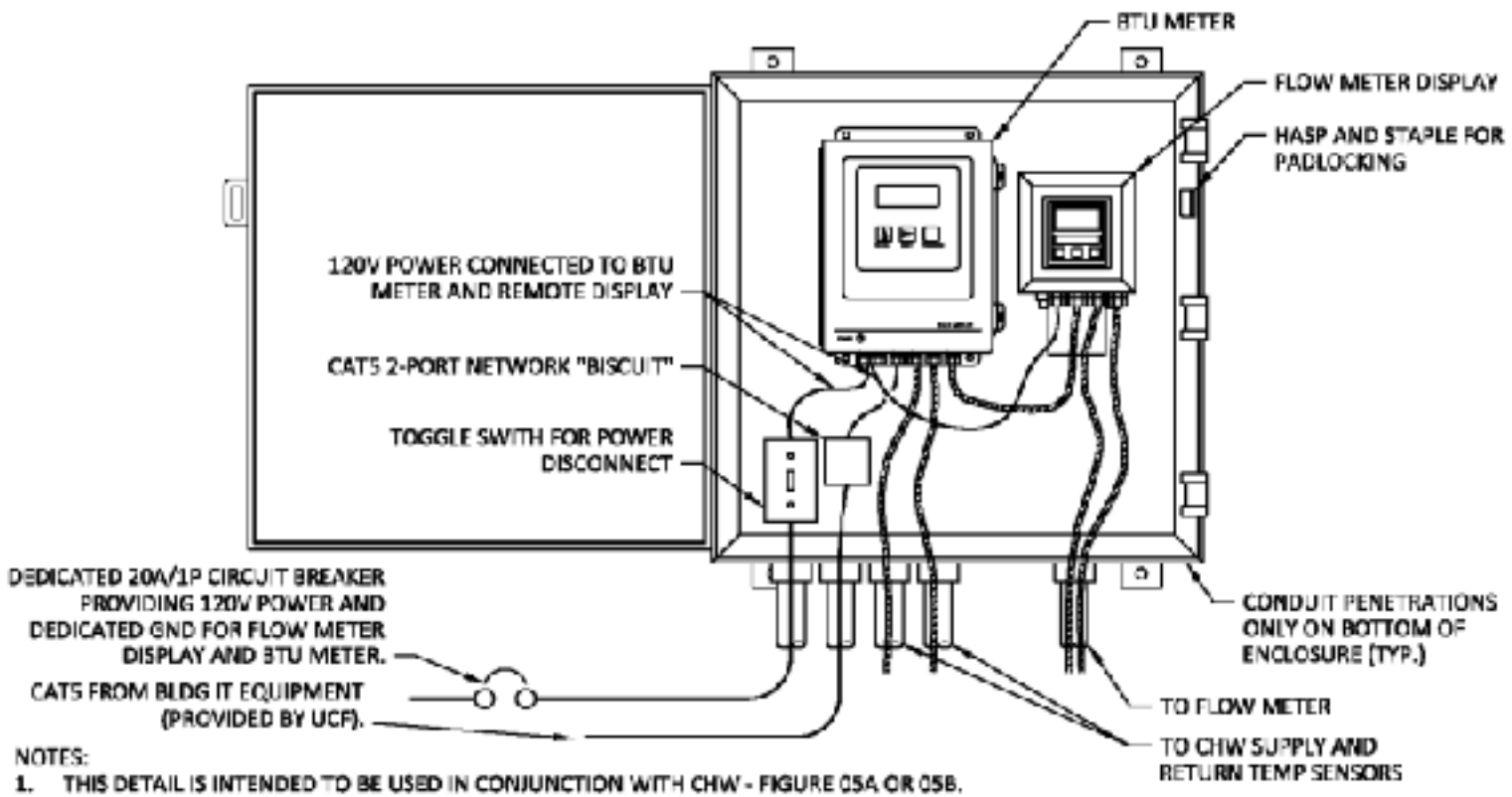

NOTES:

1. THIS DETAIL IS INTENDED TO BE USED IN CONJUNCTION WITH CHW - FIGURE 05A OR 05B.
2. THE BTU METER AND FLOW METER DIGITAL DISPLAY SHALL BE INSTALLED IN A WEATHERPROOF ENCLOSURE.
3. WEATHERPROOF ENCLOSURE REQUIREMENTS: MUST BE EQUAL TO, OR BETTER THAN THE BASIS OF DESIGN.
   a. BASIS OF DESIGN: HOFFMAN A24H24083SLP HINGED CABINET
   b. CONSTRUCTION: TYPE 4X, 304 STAINLESS STEEL WITH SEAMS CONTINUOUSLY WELDED AND GROUND SMOOTH
   c. STAINLESS STEEL NEMA CLAMPS WITH SEAMLESS FOAM-IN-PLACE GASKET
   d. DIMENSIONS: 24X24X8
   e. PROVIDE HASP AND STAPLE FOR PADLOCKING
3. MOUNT DISPLAY IN EASILY ACCESSIBLE LOCATION AT 4'-0" TO 6'-0" AFF.
4. CONSULT MANUFACTURER FOR REMOTE MOUNTING REQUIREMENTS ASSOCIATED FLOWMETER DISPLAY.
4. FLOW METER SHALL BE INTERFACED WITH THE BUILDING LEVEL AND CAMPUS LEVEL DDC SYSTEM.
5. ALL WIRING, INCLUDING ANY JOINTS MADE IN THE FIELD (IF ALLOWED) MUST FOLLOW MANUFACTURER RECOMMENDATIONS.

CHW - FIGURE 06: CHILLED WATER WET TAP

Rev. 7/1/2019

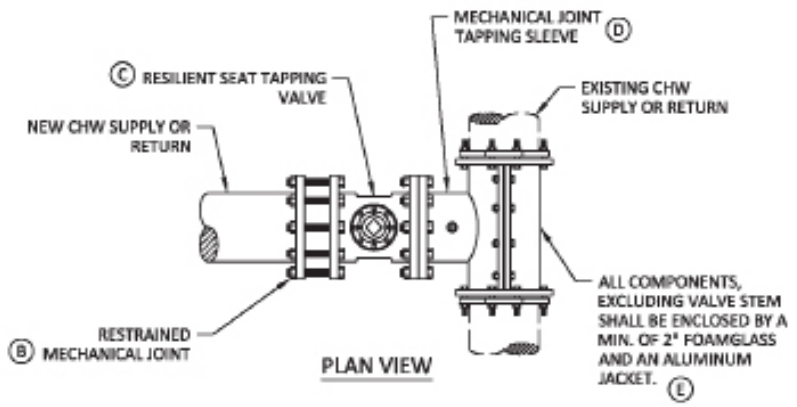

NOTES:
(A) 1. PLACEHOLDER FOR FUTURE NOTES.

VERIFICATION AREA - PLEASE COMPLETE AND SUBMIT TO UCF UES PRIOR TO 100% CD RELEASE

	Initials	Date		Initials	Date		Initials	Date		Initials	Date
(A)	NA	NA	(E)			(I)	NA	NA	(M)	NA	NA
(B)			(F)	NA	NA	(J)	NA	NA	(N)	NA	NA
(C)			(G)	NA	NA	(K)	NA	NA	(O)	NA	NA
(D)			(H)	NA	NA	(L)	NA	NA	(P)	NA	NA

CHW - FIGURE 08A: THRUST BLOCKING DETAILS

Rev. 7/1/2019

TYPICAL THRUST BLOCKING DETAILS FOR PVC BELL & RING PIPE

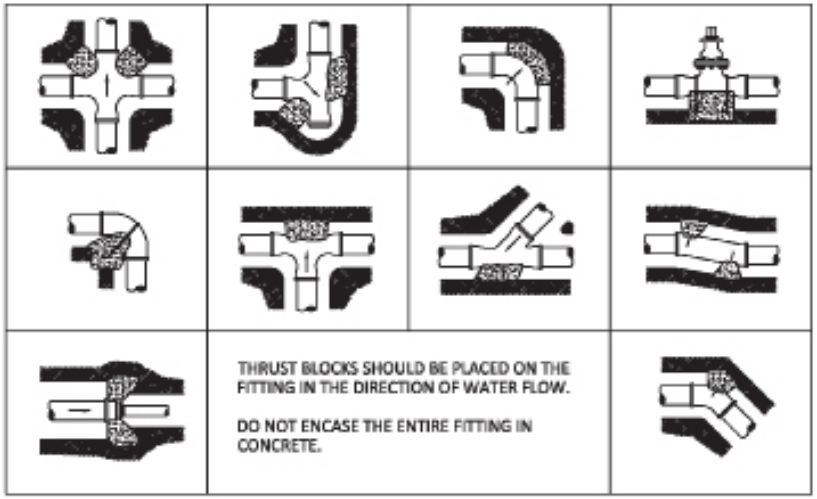

NOTES:
(A) 1. THRUST BLOCKING SHOULD BE USED ON ALL GASKET JOINT PIPE AND FITTINGS SINCE THERE ARE GREAT THRUSTS DEVELOPED WHENEVER THERE ARE CHANGES IN DIRECTION IN THE PIPELINE, DEAD ENDS, PIPE SIZES AND VALVES. THESE THRUSTS CAN BLOW THE JOINTS APART CREATING BIG MESSES.

(B) 2. THE THRUST BLOCK SHOULD BE PLACED AGAINST UNDISTURBED, FULLY COMPACTED EARTH. IT SHOULD HAVE SUFFICIENT AREA ON THE SOIL SIDE TO RESTRAIN THE THRUST. THE FITTING SHOULD BE PLACED OVER A LARGE ENOUGH AREA TO KEEP STRESSES ON THE FITTING AT A MINIMUM.

(C) 3. THE THRUST BLOCK SHOULD BE DESIGNED KNOWING THE INTENSITY OF THE THRUSTS DEVELOPED IN THE PIPE AND THE LOAD BEARING STRENGTH OF THE SOIL.

(D) 4. USING THE TABLES ON THE ASSOCIATED DETAILS YOU CAN CALCULATE THE SIZE OF THE THRUST BLOCK FOR VARIOUS PIPE SIZES.

EXAMPLE: 4" PIPE WITH A MAXIMUM PRESSURE OF 100PSI AT A 90 DEGREE ELBOW IN CLAY SOIL.

THRUST DEVELOPED = 1,800 LBS LOAD BEARING STRENGTH OF CLAY = 500 LBS

1,800 / 500 = 3.6 SQUARE FEET THRUST BLOCK

VERIFICATION AREA - PLEASE COMPLETE AND SUBMIT TO UCF UES PRIOR TO 100% CD RELEASE

	Initials	Date		Initials	Date		Initials	Date		Initials	Date
(A)			(C)			(I)	NA	NA	(M)	NA	NA
(B)			(D)			(J)	NA	NA	(N)	NA	NA

CHW - FIGURE 08B: THRUST BLOCK CALCULATION CHART

Rev. 7/1/2019

ESTIMATED BEARING STRENGTH OF SOILS

SOIL TYPE	BEARING STRENGTH LBS/FT2
MULCH, PEAT, ETC	0
SOFT CLAY	500
SILT LOAM	750
SAND	1,000
SAND AND GRAVEL	1,500
SAND AND GRAVEL WITH CLAY	2,000
SAND AND GRAVEL CEMENTED WITH CLAY	4,000
HARD PAN	5,000

PIPE SIZE INCHES	90 ELBOW LBS. FORCE	45 ELBOW LBS. FORCE	VALVES, TEES, DEAD ENDS LBS. FORCE
1 1/2	300	200	200
2	500	300	400
3	1,000	600	800
4	1,800	1,100	1,300
6	4,000	2,300	2,900
8	7,200	4,100	5,100
10	11,200	6,300	7,900
12	16,000	9,100	11,300

NOTES:

(A) 1. THESE THRUST BLOCK DETAILS ARE FOR REFERENCE ONLY.

(B) 2. ENGINEER OF RECORD MUST COMPLETE THE APPROPRIATE CALCULATIONS AND DETERMINE CORRECT THRUST BLOCK DESIGN FOR EACH APPLICATION.

VERIFICATION AREA - PLEASE COMPLETE AND SUBMIT TO UCF UES PRIOR TO 100% CD RELEASE

	Initials	Date		Initials	Date		Initials	Date		Initials	Date
(A)			(E)			(I)	NA	NA	(M)	NA	NA
(B)			(F)	NA	NA	(J)	NA	NA	(N)	NA	NA

CHW - FIGURE 09: VALVE BOX AND COVER

Rev. 7/1/2019

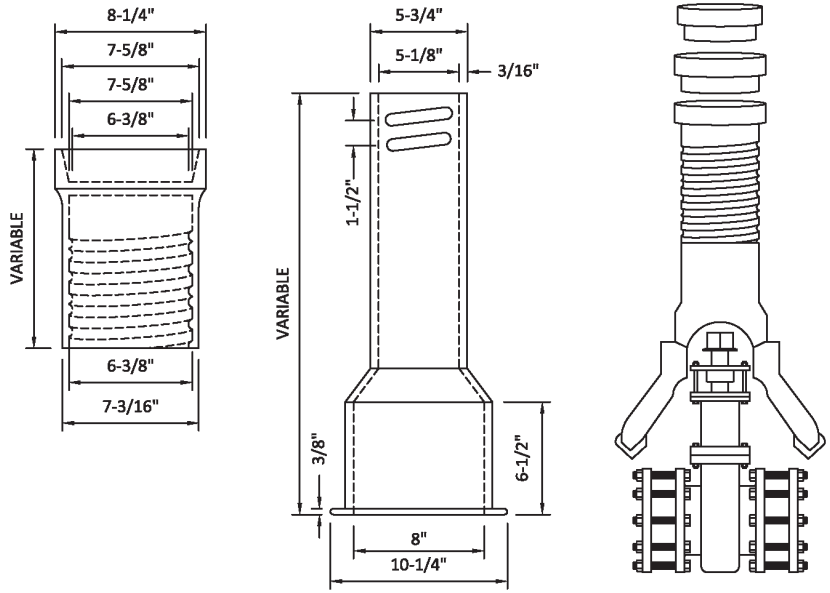

NOTES:

(A) 1. PLACEHOLDER FOR FUTURE NOTES.

VERIFICATION AREA - PLEASE COMPLETE AND SUBMIT TO UCF UES PRIOR TO 100% CD RELEASE

	Initials	Date		Initials	Date		Initials	Date		Initials	Date
(A)	NA	NA	(E)	NA	NA	(I)	NA	NA	(M)	NA	NA
(B)	NA	NA	(F)	NA	NA	(J)	NA	NA	(N)	NA	NA

Reclaimed Water Service and Meter Installation Requirements

GENERAL INFORMATION

1. UES manages Reclaim Water distribution at select locations throughout the UCF Main Campus. These standards are intended to identify any items that must exceed industry and/or code required minimums.
2. For ease of use, this section of the construction standards refers to multiple 8.5"x11" details or Figures. These details are used to convey critical information to the designer, track the designer's progress, and verify the contractor's installation. These details or Figures are referenced in the table below and are intended to be incorporated into the construction documents, by the designer, after a detailed review for code and design intent requirements.

METERING

1. Reclaim water meters are utilized for utility billing, savings calculations, demand profiling, and performance monitoring. An accurate and properlyselected and installed system is essential to these functions.
2. All meters will be provided by UES. Both the meter and installation will be paid from project funds. The meter becomes property of the university after final Certificate of Occupancy is issued.

PLAN REVIEW AND COORDINATION WITH UCF UES

1. Coordination of reclaim water service and metering requirements with UES is important for the success of the project.
2. At the 50% Construction Document Phase the following shall be shown on plans and reviewed with UES:
   - Design flows, diversity factors, and method of computation
   - Methodology used for the diversity factors
   - Proposed routing of reclaim water service from campus main distribution to the new service
   - Proposed location of meter
   - Proposed metering configuration
   - All included Figures identified by UES for the service type.
   - Designer shall identify any aspects of the Figure that cannot or will not be provided.
   - All requested Figures shall be submitted to UES through the UCF Project Manager.
3. At the 100% Construction Document Phase the following shall be shown on plans and reviewed with UES:
   - Design flows, diversity factors, and method of computation
   - Methodology for the diversity factors
   - Final location of meter
   - Final metering configuration
   - All included Figures identified by UCF for the service type. Designer shall identify any aspects of the Figure that cannot or will not be provided.
   - All requested Figures shall be submitted to UES through the UCF Project Manager.
4. Valve Locations
   - Valves must be provided for all branch connections, main ends, or other locations.

- Distribution loops must have the ability of being isolated.
- Valves are to be placed so that the maximum allowable length of reclaim water main required to be shut down for repair work must be two hundred feet in high density or five hundred feet in other areas. High density is defined as any building 20,000 square feet or greater.

5. Reclaim water main materials must be ductile iron pressure water pipe, HOPE, or PVC pressure pipe. Gate valves, Mueller 2360 or UES-approved equal, must be provided at all new branches and meter locations.
6. All pipes must be tested for leakage by filling with water to a pressure of 150 lbs. The pipes must withstand this test for two hours without any decrease in pressure.
    - All pipe leakage testing must be witnessed by UES. Pressure tests must be scheduled through the UES website 48 business hours prior to the test.
    - Any leaks identified by pressure testing shall be repaired by the contractor at no additional cost to UCF/UES.
7. Pipes and Pipe Fittings
    - Installation
        - Materials must be cleaned and maintained clean, with all coatings protected from damage. The interior of the pipe must be free of dirt and debris, and when work is not in progress, all open ends must be plugged.
        - Water from these pipes must not be used for any purpose prior to receipt of satisfactory test results.
        - Underground pressure piping system located in a traveled way or planned traveled way must be installed with minimum three feet of cover.
        - Exposed systems must be supported as necessary to hold the piping and appurtenances in a firm, substantial manner to the required lines and grades indicated, with no undue piping stresses transmitted to equipment or other items.
        - Pipe above ground and outside of buildings must be supported on concrete supports.
    - Pipes and Pipe Fittings
        - All pipe and fittings must be clearly marked with the name or trademark of the manufacturer, the batch number, the location of the plant, and the strength designation, as applicable.
        - All piping and fittings for water service must meet current American National Standards Institute (ANSI), American Society for Testing and Materials (ASTM), and AWWA standards.
        - Main distribution piping over ten inches shall be ductile iron. Service piping will be PVC.
    - Piping Permitted
        - 2” and below shall use Schedule 80 PVC
        - 3-10” shall use C900 PVC, HOPE
        - Greater than 10” shall use Ductile Iron, HOPE
        - 2.5” pipe shall NOT be used
        - Galvanized piping is prohibited
    - Polyvinyl Chloride (PVC)

- Connections for pipe three inches in diameter and larger must be rubber compression ring type with restrained joints per AWWA guidelines.

- Valves
  - o All valves must be American manufactured and the valve type, size rating, and flow direction arrow must be clearly marked on each unit.
  - o All valves shall be fully ported.
  - o Hand wheel valves are not permitted below grade.
- Underground Service (General)
  - All valves must be American-manufactured.
  - Valves must be iron body, epoxy-coated, bronze-mounted, solid wedge (resilient seated) or double-disc (water), nonrising stem type, and must be equipped with two inch square cast iron wrench nuts.

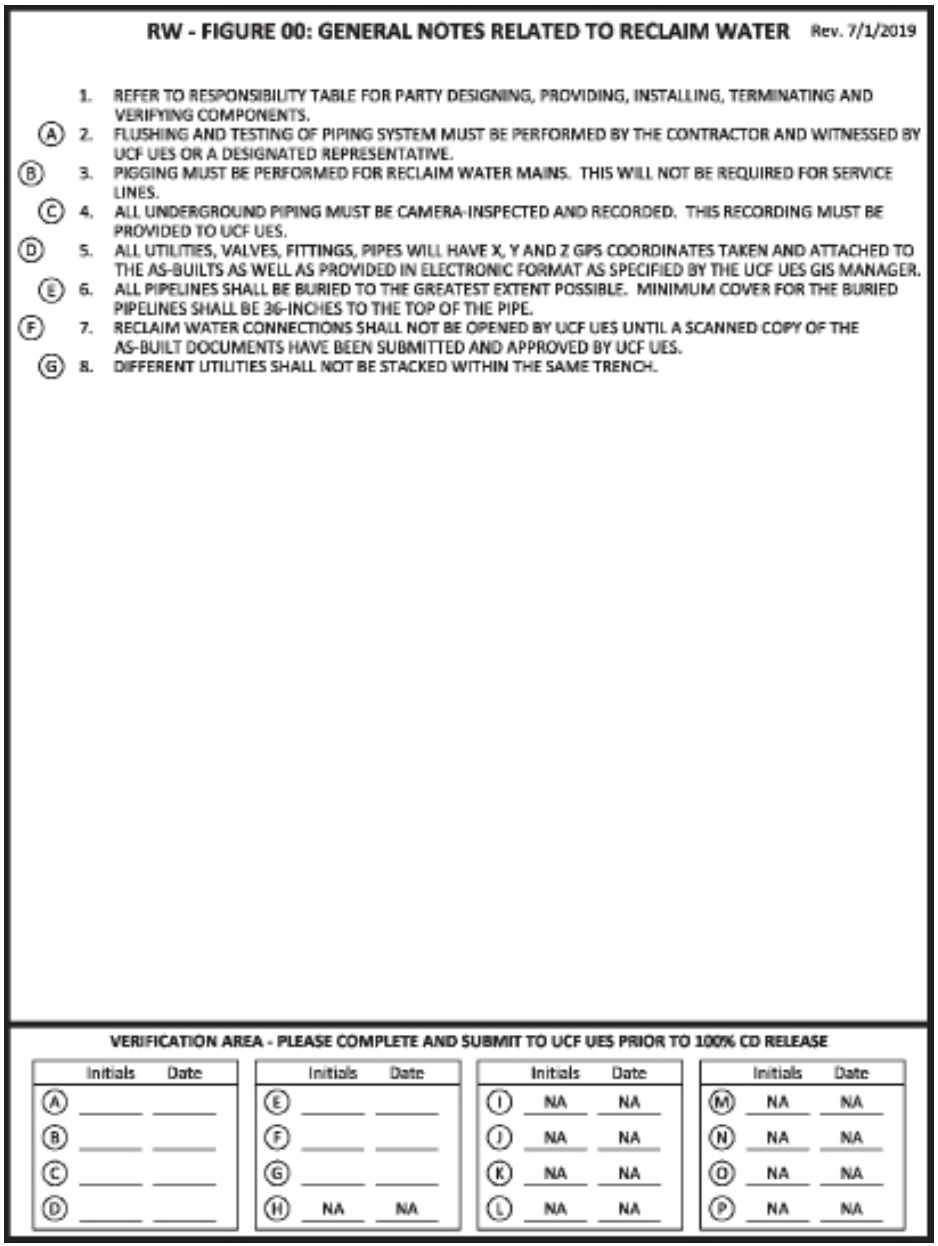

RW - FIGURE 00: GENERAL NOTES RELATED TO RECLAIM WATER Rev. 7/1/2019

1. REFER TO RESPONSIBILITY TABLE FOR PARTY DESIGNING, PROVIDING, INSTALLING, TERMINATING AND VERIFYING COMPONENTS.
2. (A) FLUSHING AND TESTING OF PIPING SYSTEM MUST BE PERFORMED BY THE CONTRACTOR AND WITNESSED BY UCF UES OR A DESIGNATED REPRESENTATIVE.
3. (B) PIGGING MUST BE PERFORMED FOR RECLAIM WATER MAINS. THIS WILL NOT BE REQUIRED FOR SERVICE LINES.
4. (C) ALL UNDERGROUND PIPING MUST BE CAMERA-INSPECTED AND RECORDED. THIS RECORDING MUST BE PROVIDED TO UCF UES.
5. (D) ALL UTILITIES, VALVES, FITTINGS, PIPES WILL HAVE X, Y AND Z GPS COORDINATES TAKEN AND ATTACHED TO THE AS-BUILTS AS WELL AS PROVIDED IN ELECTRONIC FORMAT AS SPECIFIED BY THE UCF UES GIS MANAGER.
6. (E) ALL PIPELINES SHALL BE BURIED TO THE GREATEST EXTENT POSSIBLE. MINIMUM COVER FOR THE BURIED PIPELINES SHALL BE 36-INCHES TO THE TOP OF THE PIPE.
7. (F) RECLAIM WATER CONNECTIONS SHALL NOT BE OPENED BY UCF UES UNTIL A SCANNED COPY OF THE AS-BUILT DOCUMENTS HAVE BEEN SUBMITTED AND APPROVED BY UCF UES.
8. (G) DIFFERENT UTILITIES SHALL NOT BE STACKED WITHIN THE SAME TRENCH.

VERIFICATION AREA - PLEASE COMPLETE AND SUBMIT TO UCF UES PRIOR TO 100% CD RELEASE

	Initials	Date
(A)		
(B)		
(C)		
(D)		

	Initials	Date
(E)		
(F)		
(G)		
(H)	NA	NA

	Initials	Date
(I)	NA	NA
(J)	NA	NA
(K)	NA	NA
(L)	NA	NA

	Initials	Date
(M)	NA	NA
(N)	NA	NA
(O)	NA	NA
(P)	NA	NA

RW - FIGURE 01: RECLAIM WATER RESPONSIBILITY TABLE

Rev. 7/1/2019

RESPONSIBILITY TABLE

COMPONENT	DESIGN BY (NOTE 1)	PROVIDED BY	INSTALLED BY	TERMINATED BY	VERIFIED BY
ALL COMPONENTS	SIZE/QTY - UCF LOCATION - EOR, UCF UES	CONTRACTOR	CONTRACTOR	--	EOR & UCF UES

NOTES:
1. WHEN REQUIREMENTS ARE PROVIDED BY UCF UES, THEY SHALL BE CONSIDERED REQUESTS IN ADDITION TO CODE REQUIRED MINIMUMS. ENGINEER OF RECORD (EOR) SHALL REVIEW, CONFIRM APPLICABILITY OF REQUESTS AND INCORPORATE THESE ITEMS INTO THE PROJECT DOCUMENTS AS APPLICABLE.
2. TERMINATION INCLUDES INSTALLATION OF COMPONENTS AND PROPER INSTALLATION OF TRACER WIRE.

RW - FIGURE 02: STANDARD ROADWAY OPEN CUT DETAIL

Rev. 7/10/2019

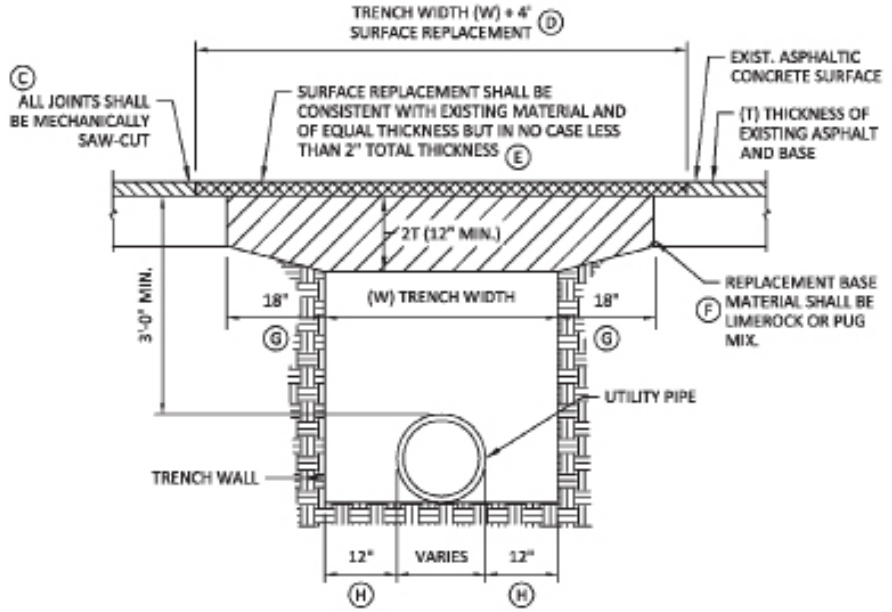

NOTES:
A 1. BACKFILL SHALL BE PLACED IN 6" LAYERS FROM BENEATH THE HAUNCHES OF THE PIPE TO THE BASE AND COMPACTED TO 98% DENSITY PER AASHTO T-180 MODIFIED PROCTER.
B 2. BASE MATERIALS SHALL BE PLACED IN TWO OR THREE LAYERS ROLLED AND TAMPED TO ABOVE SPECIFIED DENSITY.

VERIFICATION AREA - PLEASE COMPLETE AND SUBMIT TO UCF UES PRIOR TO 100% CD RELEASE

	Initials	Date
A		
B		
C		
D		

	Initials	Date
E		
F		
G		
H		

	Initials	Date
I	NA	NA
J	NA	NA
K	NA	NA
L	NA	NA

	Initials	Date
M	NA	NA
N	NA	NA
O	NA	NA
P	NA	NA

RW - FIGURE 03: LOCATING WIRE TERMINAL

Rev. 7/1/2019

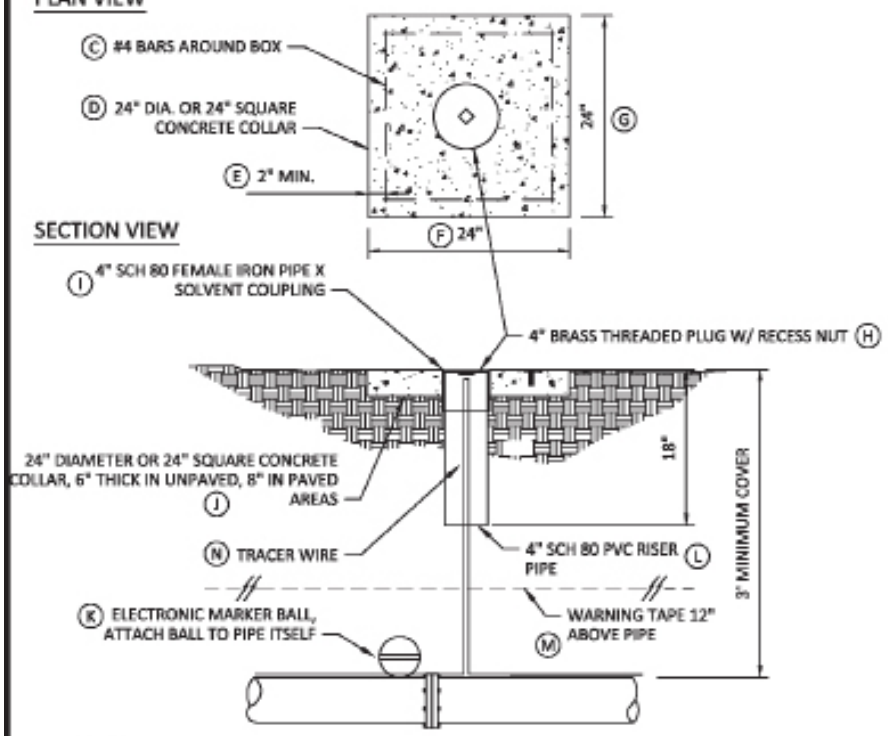

NOTES:

A 1. LOCATING WIRE TERMINAL SHALL BE PROVIDED ALONG BURIED UTILITY WHERE DISTANCE BETWEEN VALVE BOXES EXCEEDS 300 FEET. LOCATING WIRE TERMINAL SHALL BE PROVIDED AT 300 FOOT INTERVALS NOT GREATER THAN 300 FEET IN THESE INSTANCES.

B 2. LOCATOR WIRE ACCESS - 4" SCHEDULE 80 PVC, FEMALE ADAPTER COUPLING AND 4" BRASS PLUG WITH RECESSED NUT. TERMINATE INSULATED, SOLID 10 GAUGE COPPER LOCATOR WIRES AT TOP WITH 12" OF EXTRA WIRE. INSULATED WIRE SHALL BE COLOR CODED.

VERIFICATION AREA - PLEASE COMPLETE AND SUBMIT TO UCF UES PRIOR TO 100% CD RELEASE

	Initials	Date		Initials	Date		Initials	Date		Initials	Date
A			F			K			P	NA	NA
B			G			L			Q	NA	NA
C			H			M			R	NA	NA
D			I			N			S	NA	NA
E			J			O	NA	NA	T	NA	NA

RW - FIGURE 04: VALVE & VALVE BOX DETAIL

Rev. 7/1/2019

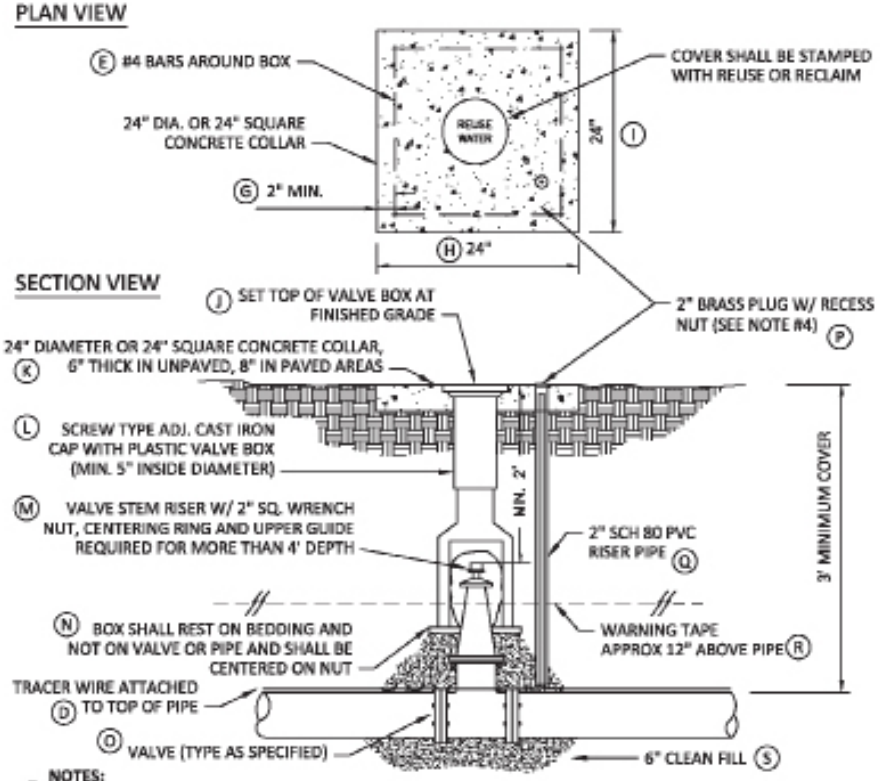

NOTES:

A 1. VALVES SHALL NOT BE LOCATED IN STREET CURBS.

B 2. VALVE COVERS SHALL BE PAINTED PURPLE FOR RECLAIM/REUSE FOR SEWER.

C 3. LOCATOR WIRE ACCESS - 2" SCHEDULE 80 PVC, FEMALE ADAPTER COUPLING AND 2" BRASS PLUG WITH RECESSED NUT. TERMINATE INSULATED TRACER WIRES AT TOP WITH 12" OF EXTRA WIRE.

VERIFICATION AREA - PLEASE COMPLETE AND SUBMIT TO UCF UES PRIOR TO 100% CD RELEASE

	Initials	Date		Initials	Date		Initials	Date		Initials	Date
A			F			K			P		
B			G			L			Q		
C			H			M			R		
D			I			N			S		
E			J			O			T	NA	NA

RW - FIGURE 05: RECLAIM WATER MAIN WET TAP

Rev. 7/1/2019

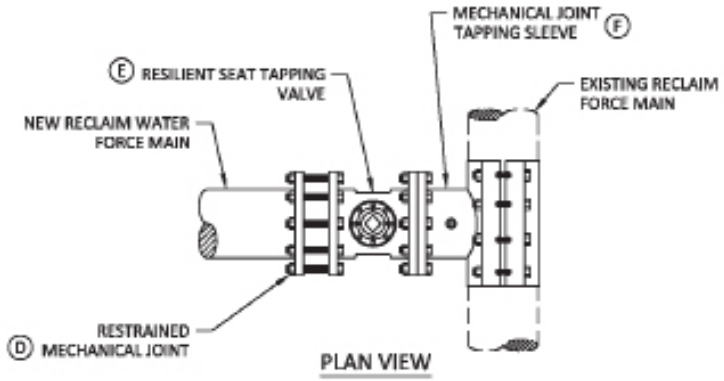

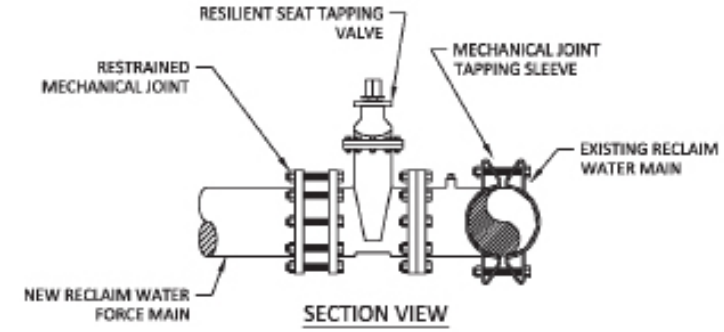

NOTES:

(A) 1. ALL TAPPING SHALL BE WITNESSED BY UCF UES OR A DESIGNATED REPRESENTATIVE. THE INSTALLING CONTRACTOR SHALL NOTIFY UCF UES AT LEAST 48 HRS PRIOR TO THE START.

(B) 2. TAPPING SLEEVES UTILIZE MECHANICAL JOINTS, WITH OUTLET FLANGE ANSI B16.1 125 STANDARD, AND MUST BE MUELLER H-304SS OR UCF UES APPROVED EQUAL.

VERIFICATION AREA - PLEASE COMPLETE AND SUBMIT TO UCF UES PRIOR TO 100% CD RELEASE

	Initials	Date
(A)		
(B)		
(C)	NA	NA
(D)		

	Initials	Date
(E)		
(F)		
(G)	NA	NA
(H)	NA	NA

	Initials	Date
(I)	NA	NA
(J)	NA	NA
(K)	NA	NA
(L)	NA	NA

	Initials	Date
(M)	NA	NA
(N)	NA	NA
(O)	NA	NA
(P)	NA	NA